BONENG

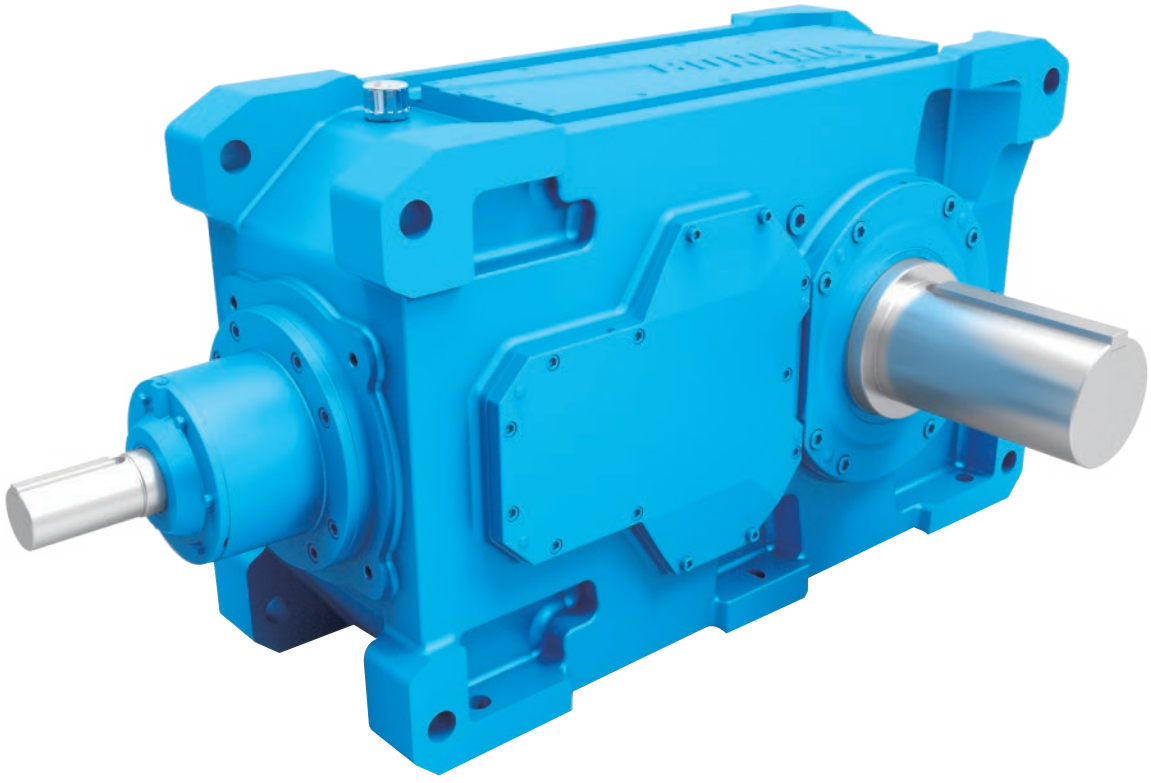

H Helical Gearbox & B Bevel-helical Gearbox Sizes 13-18

Modified date 07/2021
Selection Sample C05.0028-EN

Boneng Transmission

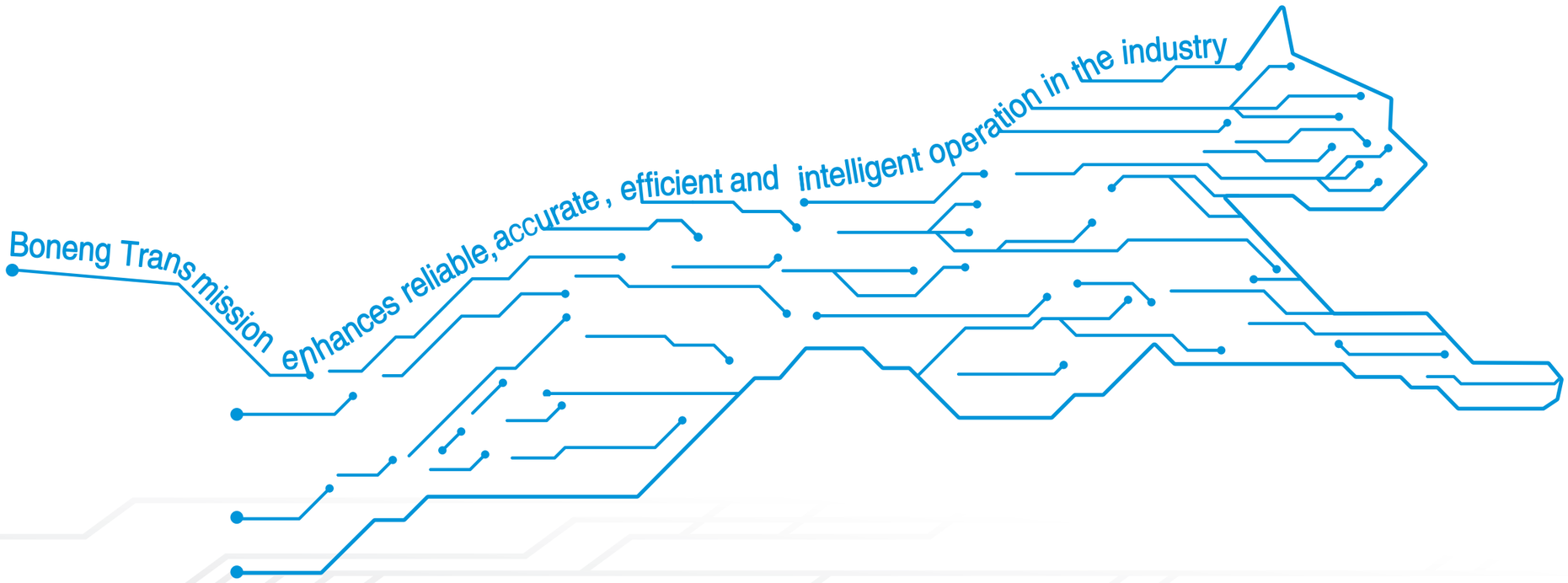

Controller/ Drive/ Motor/ Gearmotor/ Gearbox

BONENG H Helical Gearbox &B Bevel–helical Gearbox

On the basis of summarizing gearbox design and manufacturing experiences in the past twenty years, analyzing and absorbing advanced technology of international heavy duty gearbox production, Boneng transmission makes innovative development, pushing forward the new type H&B heavy duty gearbox to better satisfy customer requirements.

Compared with internationally advanced gearbox and the original H&B industrial gearbox of Boneng, the new type H&B heavy duty gearbox have the following characteristics:

- Unique modular design, general applications of components are maximized, which is convenient for international production. Storage quantity is small, supplement circle is short.
- Unique modular design, allocation exchange degree of functional attachments flexibly satisfy various kinds of required structures, arrangement form and different working situations of customer equipment.
- Transmission shaft is in line layout, under the same volume, transmission central distance is larger, bearing capacity is larger.
- Wheel pair meshing contact ratio increases, transmission is more stable, noise is lower.
- The appearance design shows world–wide product design idea of Boneng Transmission, it owns intellectual property rights.
- Frame type load–carrying structure design, the whole structure is stronger, footing is more fastened.
- Improved cooling fan and cooling coil design can effectively reduce the temperature during gearbox running.
- Output shaft sealing applies double oil sealing, the sealing is more reliable, the applications are wider.

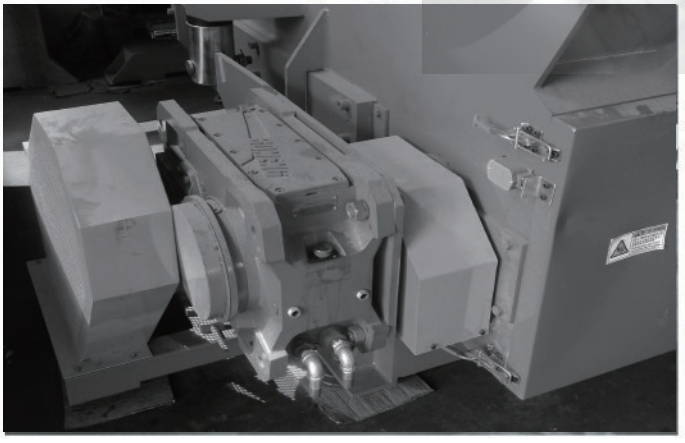

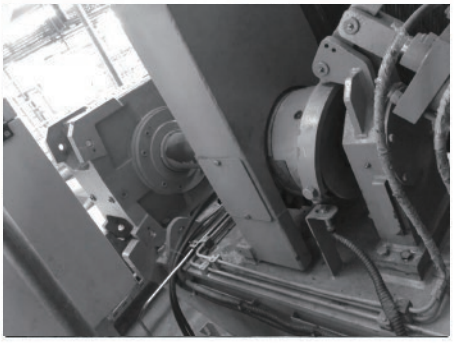

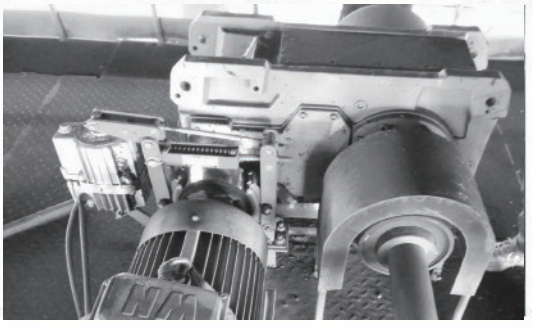

For coal, electric power, petroleum, metallurgy, cement, shipping, port, hoisting and conveying industries, the high–quality and long lifespan new type gearbox of Boneng Transmission can satisfy your requirements.

ISO9001

Note：

- The structure scheme,appearance diagram and other attached diagrams in sample are examples,there is no strict proportion requirement.(The unmarked dimension units are mm).
- The marked weight is average value,it has no constraint force.

⚠You must conform to the following instructions:

- To prevent accidents,all the rotation parts are added with protective covers according to the safety regulations of the nation and region.
- Before debugging,you should carefully read instruction book.
- Gearbox is on running–permission status when delivered,you should add lubrication oil before putting it into running.
- The marked oil quantity in sample is only reference value,actual oil filling quantity should be the same with the mark on oil immersion lens.
- Lubrication oil viscosity should be selected according to working situation and application environment temperature of gearmotor.
- You can only apply lubrication oil of internationlly famous brand.

Product Function Mark

Oil glass

Breather

Oil filler

Oil drain

Contents

Structure scheme 01
Mounting mode 02
Selection 03
Service factors 05
Key to symbols 07
Selection example 08
Transmission capacity table 09
Rated thermal capacity table 21
Permissible additional radial force on output shaft 33
Shaft assemblies 34
Outline dimension 39
Shaft end centre hole 51
Dimension of parallel key and keyway 53
Suggested output connection dimensions 54
Input with motor and flange input 57
Accessory 61

1.Structure scheme：

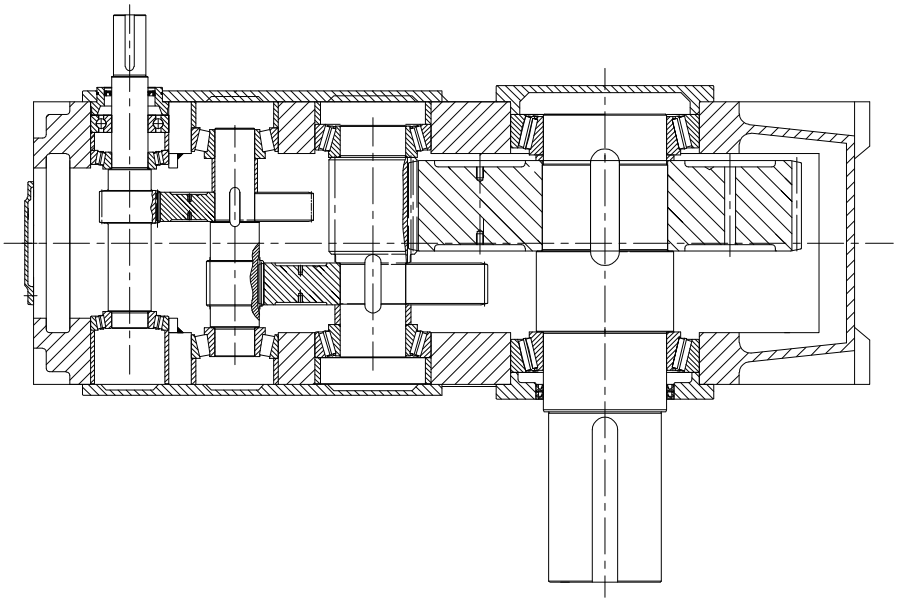

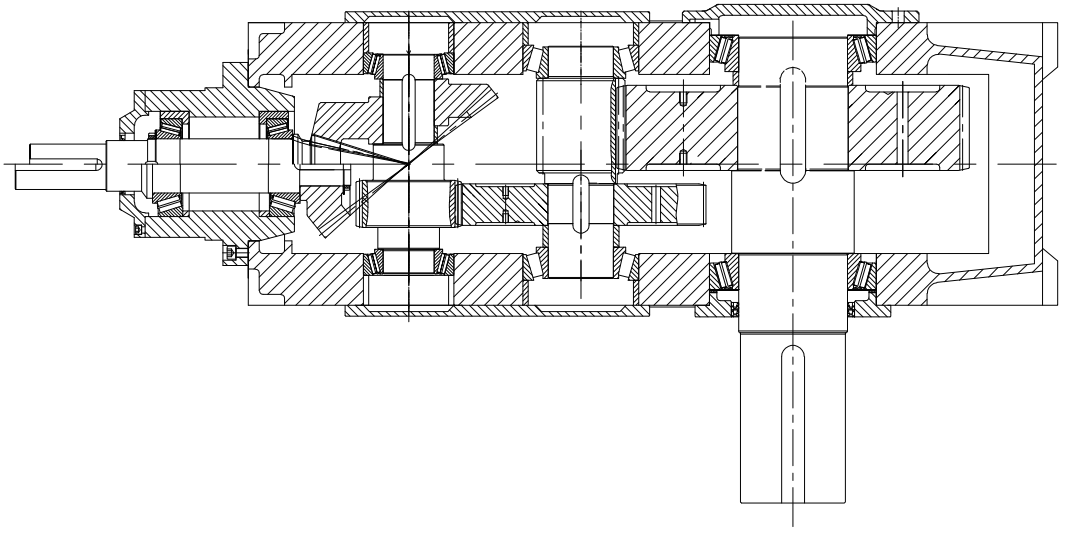

2.Mounting positions:

Horizontal mounting				
	Solid shaft	Hollow shaft	Hollow shaft with shrink disk	Hollow shaft with involute spline
H series iN=3.15-450	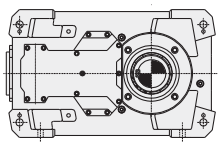 H...HS	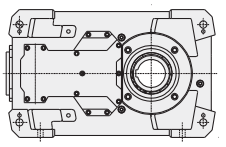 H...HH	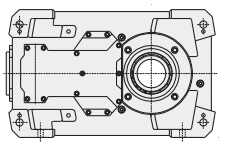 H...HD	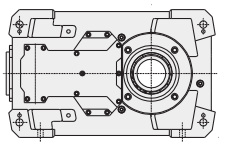 H...HK
B series iN=6.3-400	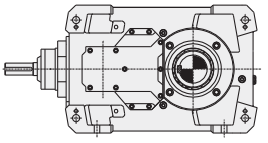 B...HS	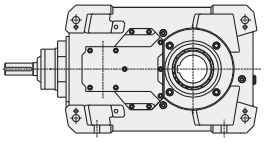 B...HH	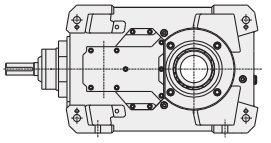 B...HD	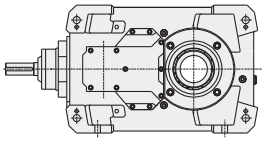 B...HK

Vertical mounting				
	Solid shaft	Hollow shaft	Hollow shaft with shrink disk	Hollow shaft with involute spline
H series iN=3.15-450	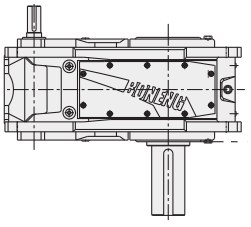 H...VS	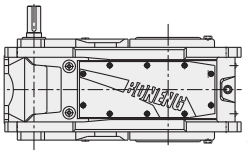 H...VH	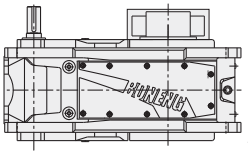 H...VD	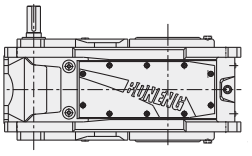 H...VK
B series iN=6.3-400	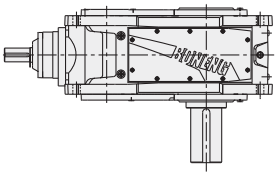 B...VS	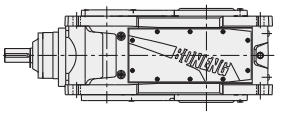 B...VH	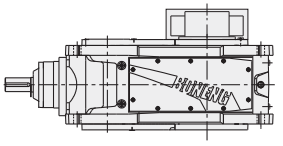 B...VD	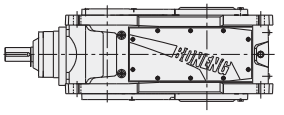 B...VK

3.Selection:

Serial	Definition	Symbol	Parameter calculation
1	Driven equipment factor	f_1	Refer to page5 f1 table
2	Prime mover factor	f_2	Prime mover factor: f2 Motor, hydraulic motor, turbine: 1.0 4-6 Cylinder piston engine, cyclic variation 1:100 to 1: 200: 1.25 1-3 Cylinder piston engine, cyclic variation 1:100: 1.5
3	Gear unit safety factor	S_F	Refer to page4 sf table
4	Relation between input and output shafts	H、B	Parallel shaft select H series, right angle, select B series
5	Transmission efficiency of gear unit	η	2-stage:96%, 3-stage:94%, 4-stage:92%
6	Input speed	n_1	≤1800r/min For higher speed, please consult us.
7	Determination of ratio	i	i=n1/n2
8	Confirm gear unit input power with torque or power needed by driven equipment.	P_1	P1=T2 • n1/(9550 • i • η) 或 P1=P2/η
9	According to calculation, check transmission capacity table to determine gear unit size	T_{2N}、P_{1N}	T2N ≥T2•f1•f2•SF 或 P1N≥P1•f1•f2•SF If it doesn't satisfy conditions:3.33•P1≥P1N , Please consult us.
10	Peak torque verification *	T_A	P1N≥TA• n1• f3/9550 f3: Load peaks per hour 1-5 / 6-30 / 31-100 / >100 Single direction loading: 0.5 / 0.65 / 0.7 / 0.85 Alternate loading: 0.7 / 0.95 / 1.10 / 1.25
11	After selecting connection mounting and accessories, check allowable strength of the shaft	F_{r1}/F_{r2} F_{a1}/F_{a2}	Radial loadneedtobecheckedwhenradialloadimposedbybelt pulley,chainsprocketandgeararepresent.(Seepage32)
12	Determine lubrication method, select lubrication oil		Horizontalmounting: Lubricationmethodsforselection: 1)Splashlubrication 2)Dip-inlubrication 3)Forcedlubrication Shaftendpumplubrication Motoroilpumplubrication Oilstationlubrication Vertical mounting: Lubricationmethodsforselection: 1)Dip-inlubrication 2)Forcedlubrication Shaftendpumplubrication Motoroilpumplubrication Oilstationlubrication
13	Determine cooling method		1) If it satisfies the following condition, the gear unit will not be equipped with auxiliary cooling device. P1≤PGA×f4×f8 2) If it satisfies the following condition, the gear unit will be equipped with cooling fan. P1≤PGB×f4×f8 3) If it satisfies the following condition,the gearbox will be equipped with cooling coil.P1≤PGCxf5xf8 4) If it satisfies the following condition, the gear unit will be equipped with water-oil cooler.P1≤PGD×f5×f8 5) Gear unit can be equipped with other cooling devices: air-oil cooler, water-oil cooler, users can equip petrol station by themselves to provide circulated cooling oil. (Refer to page4 for f4、f5、f8).
14	Determine each item according to type designation		Refer to page 4.

* Peak torque: maximum loading torque means the maximum torque caused by starting, braking or maximum pulse loading. (Under common working conditions, peak torque is the maximum torque may occur when a machine starts or brakes)

Gearbox safety factor	SF
For ordinary equipment, only single machine stops production when gear unit fails. easy to replace spare parts and minor loss occured.	1.0≤SF≤1.3
For important equipment, the production line or the whole plant will stop production, when gear unit fails, great loss occured, stopping accident loss is large.	1.3<SF≤1.5
High reliability requirement, it may cause heavy production stop accident, when gear unit fails, causing large economic loss and even may cause human life accident.	1.5<SF

Thermal factor f4

Gear unit without cooling or with fan

Ambient temperature	Operating cycle per hour				
	100	80	60	40	20
10 ℃	1.11	1.31	1.60	2.14	3.64
20 ℃	1.00	1.18	1.44	1.93	3.28
30 ℃	0.88	1.04	1.27	1.70	2.89
40 ℃	0.75	0.89	1.08	1.45	2.46
50 ℃	0.63	0.74	0.91	1.22	2.07

Thermal factor f5

Gearbox with cooling coil or with cooling coil and fan

Ambient temperature	Operating cycle per hour				
	100	80	60	40	20
10 ℃	1.05	1.23	1.50	2.03	3.41
20 ℃	1.00	1.17	1.43	1.93	3.25
30 ℃	0.93	1.09	1.33	1.79	3.02
40 ℃	0.87	1.02	1.24	1.68	2.83
50 ℃	0.81	0.95	1.16	1.56	2.63

⚠ Note: Operating cycle ED: $ED = \frac{tf}{tf+tr} \cdot 100\%$

tf: Working time with loading; tr: Stop time.

f8

Vertical mounted gear unit oil supply factor. For horizontally mounted gear unit f8=1.0
When forced lubrication applied, f8=1.05

Gear unit type	Oil supply method	Without auxiliary cooling device	With cooling fan	With cooling coil	With fan and cooling coil
H2..V,H3..V H4..V	Dip-in lubrication	0.95	*	0.95	*
	Forced lubrication	1.15	*	1.05	*
B2..V,B3..V B4..V	Dip-in lubrication	0.95	0.95	0.95	0.95
	Forced lubrication	1.15	1.10	1.10	1.10

* Please consult us.

Type designation:

B 3 15 H S A - C56 - AF280 + UF21

Series
H helical gear unit
B bevel-helical gear unit

Number of Gear Stage
2-stage/3-stage/4-stage

Size

Mounting mode
H=Horizontal mounting
V=Vertical mounting

Output Shaft Mode
S=Solid shaft with parallel key
H=Hollow shaft with parallel key
D=Hollow shaft with shrink disc
K=Hollow shaft with involute spline

Shaft Assembly Code
A/B/C/D/E/F/G/H/I

Nominal Ratio Code

Input Part
M,MH,MP,YZ=Motor
AF=AF Motor connection flange
S=S Input shatf

Accessories and Specific Configuration

4 Service factor:

Driven equipment factor				f1
Driven equipment	Daily operating time with load(hour)			
	≤ 2	> 2–10	> 10	
Sewage treatment				
Concentrator(Central Transmission)	–	–	1.2	
Compressed filter	1.0	1.3	1.5	
Flocculator	0.8	1.0	1.3	
Aerator	–	1.8	2.0	
Collector	1.0	1.2	1.3	
Vertical,rotary group				
Blended collector	1.0	1.3	1.5	
Concentrator	–	1.1	1.3	
Screw pump	–	1.3	1.5	
Water wheel machine	–	–	2.0	
Pump				
Centrifugal pump	1.0	1.2	1.3	
Volume–down pump				
1 Piston	1.3	1.4	1.8	
>1 Piston	1.2	1.4	1.5	
Dredge				
Bucket conveyor	–	1.6	1.6	
Unloading device	–	1.3	1.5	
Caterpillar travelling mechanism	1.2	1.6	1.8	
Bucket digger				
Be used for picking up	–	1.7	1.7	
Be used for rough materials	–	2.2	2.2	
Chopper	–	2.2	2.2	
Traveling mechanism*	–	1.4	1.8	
Plate blender	–	1.0	1.0	
Chemical industry				
Extruder	–	–	1.6	
Paste mixer	–	1.8	1.8	
Rubber calendar	–	1.5	1.5	
Cooling cylinder	–	1.3	1.4	
Material mixer, be used for				
Uniform medium	1.0	1.3	1.4	
Non–uniform medium	1.4	1.6	1.7	
Blender, be used for				
Uniform density medium	1.0	1.3	1.5	
Un–uniformed medium	1.2	1.4	1.6	
Un–uniformed gas absorption	1.4	1.6	1.8	
Oven	1.0	1.3	1.5	
Centrifugal machine	1.0	1.2	1.3	
Metal processing equipment				
Plate turnover	1.0	1.0	1.2	
Steel pushing device	1.0	1.2	1.2	
Winding machine	–	1.6	1.6	
Cooling bed transverse frame	–	1.5	1.5	
Roller leveler	–	1.6	1.6	
Roller path				
Continuous	–	1.5	1.5	
Interval	–	2.0	2.0	
Reversing mill	–	1.8	1.8	
Cutter				
Continuous*	–	1.5	1.5	
Crank type*	1.0	1.0	1.0	
Continuous casting driving device	–	1.4	1.4	
Rolling mill				
Reversing cogging mill	–	2.5	2.5	
Reversing plate slab mill	–	2.5	2.5	
Reversing wire mill	–	1.8	1.8	
Reversing thin plate mill	–	2.0	2.0	
Reversing middle thickness plate mill	–	1.8	1.8	
Roll gap adjusting and driving device	0.9	1.0	–	

Driven equipment	Daily operating time with load(hour)		
	≤ 2	> 2–10	> 10
Conveyingmachine			
Bucket conveyor	–	1.4	1.5
Winch	1.4	1.6	1.6
Hoist	–	1.5	1.8
Belt conveyor≤150kW	1.0	1.2	1.3
Belt conveyor≥150kW	1.1	1.3	1.4
Elevators for goods*	–	1.2	1.5
Elevators for customers*	–	1.5	1.8
Scraper conveyor	–	1.2	1.5
Automatic ladder	1.0	1.2	1.4
Rail traveling mechanism	–	1.5	-
Various frequency device	–	1.8	2.0
Reciprocating compressor	–	1.8	1.9
Hoisting mechanism**			
Rotary mechanism*		1.4	1.8
Pitching mechanism		1.1	1.4
Traveling mechanism		1.6	2.0
Lifting mechanism		1.1	1.4
Jibcrane		1.2	1.6
Cooling tower			
Cooling tower fan	–	–	2.0
Fan (Shaft flow and centrifugal type)	–	1.4	1.5
Food industry			
Sugar production	–	–	1.7
Sugar–cane cutter*			
Sugar crane mill	–	–	1.7
Beet sugar production			
Beet masher	–	–	1.2
Squeeze machine, mechanical refrigerator,			
Cooking machine	–	–	1.4
Beet cleaner			
Beet chopper	–	–	1.5
Paper-making machinery			
Various kinds***	–	1.8	2.0
Pulper driving device	Supply goods according to customer requirements		
Centrifugal compressor	–	1.4	1.5
Rope way cable car			
Delivery ropeway	–	1.3	1.4
Cableway of shuttle system	–	1.6	1.8
T rod elevator			
Continuous cableway	–	1.3	1.4
	–	1.4	1.6
Cement industry			
Concrete blender	–	1.5	1.5
Crusher**	–	1.2	1.4
Rotary kiln	–	–	2.0
Tube mill	–	–	2.0
Powder concentrator	–	1.6	1.6
Roller press	–	–	2.0

Driven equipment factor					f1		
Driven equipment	Daily running time with load(hour)			Driven equipment	Daily running time with load(hour)		
	≤ 2	> 2-10	> 10		≤ 2	>2-10	> 10
Wood industry				**Plastics industry**			
Barking machine				Miller, compound grinding、			
Feed drive	1.25	1.25	1.50	Coating, film、	1.25	1.25	1.25
Main drive	1.75	1.75	1.75	Conveying pipe, Pulling rod, thin type			
Conveyor				Pipe type, Pile drawer	1.25	1.25	1.50
Burner, repeating saw、	1.25	1.25	1.50	Continuous mixer, Calender、			
Rotary tower, transit transport				Blow film, to plasticizing	1.50	1.50	1.50
Main loading, heavy loading	1.50	1.50	1.50	Batch mixer			
Main original wood, land base	1.75	1.75	2.00		1.75	1.75	1.75
Conveying chain				**Rubber industry**			
Floor	1.50	1.50	1.50	Continuous strong inner mixer,Mix roller,			
Green-wood	1.50	1.50	1.75	Batch feeding mixer (except for double sticks)	1.50	1.50	1.50
Cutting Chain				Refiner, calender			
Saw transmission, traction	1.50	1.50	1.75	Double roller clamp feeding and mixed miller			
Peeling barrel	1.75	1.75	2.00	Batch strong inner mixer,			
Feed drive				Double stick single groove grain stick	1.25	1.25	1.50
Edging, wood trimmer、				Miller heater,double sticks			
Planer feed, assorting table,、	1.25	1.25	1.50	Batch feeding mixer	1.75	1.75	1.75
Automatic incline lifting				Grinder,Crusher heater,double			
Multi-shaft feed, raw wood				Rolls,Batch charing grinder			
Transportation and rotation	1.75	1.75	1.75	Wave roll crusher	2.00	2.00	2.00
Transportation				**Generator and exciter**	1.00	1.00	1.25
Charging tray、							
Plywood lathe drive、	1.50	1.50	1.75	**Hammer crusher**	1.75	1.75	2.00
Convey ing chain, Lifting							
				Sand miller	1.25	1.25	1.50

Note: 1.Determine required power P2 of the driven equipment;

*) Determine rated power according to maximum torque

**) The actual service factor should be selected according to accurate loading classification, for specific information, please consult us.

***) It is necessary to check thermal capacity.

2. The factors are experience value. The premise of using these factors is that the above mechanical equipment should conform to common design regulation and loading conditions. If there is special situation,please consult us.

3. For machines that are not listed in this table, please consult us.

5. Key to symbols:

Symbols	Instruction	Unit
i	Actual ratio	/
i_N	Nominal ratio	
i_{ex}	Exact ratio	
T_2	Output torque	N・m
T_{2N}	Reted output torque	
T_A	Max.Torque occurring on input shaft, e.g.Peak operating,starting or braking torque	
$T_{n2atmax}$	Nominal output torque at highest speed	
$T_{n2atmin}$	Nominal output torque at lowest speed	
P_{1N}	Rated input power	kW
P_{GA}	Nominal thermal capacity of gearbox without auxiliary cooling equipmengt	
P_{GB}	Nominal thermal capacity gearbox with cooling fan	
P_{GC}	Nominal thermal capacity of gearbox with cooling coil	
P_{GD}	Normal thermal capacity of gearbox with water-oil cooler	
P_1	Input power	
P_2	Required power of driven machine	
f_1	Driven machine factor	/
f_2	Prime mover factor	
f_3	Peak load factor	
f_4	Thermal factor(Without auxiliary cooling,or witho fan cooling)	
f_5	Thermal factor(with water-oil cooler)	
f_8	Oil supply factor for vertical gearbox	
S_F	Safety factor of gearbox	
n_1	Input speed	r/min
n_2	Output speed	
n_{2N}	Nominal output speed	
η	Efficiency	/
f	Motor frequency	Hz
U_m	Motor voltage	V
ED	Operating cycle per hour	%

6 Selection example

Known conditions:

Prime mover:

Motor power: 185kW

Motor speed: n_1=1450r/min

Maximum starting torque: T_A=1850N.m

(This value is usually provided by the users.If not,normal torquex1.6 preails)

Driven equipment (working machine):

Type: Belt conveyor

Speed: n_2=26r/min

Required power: P_2=155kW

Duty: 12 hours/day

Starts per hour: 7

Operating cycle per hour: 100%

Ambient temperature: 40℃

Place of installation: Outdoor mounting

Altitude: 500m

Gear box:

Bevel–helical gear unit, horizontal mounting, with parallel key

solid shaft output

Shaft arrangement form C

Output shaft direction of rotation: run clockwise to output shaft

With backstop (accessory code UB11)

Selection procedure:

1.Calculation of ratio:

$i=n_1/n_2$=1450/26=55.8 iN=C56

2.Determine rated power of gear box

$P_1=P_2/\eta$=155/(94%)=165kW

$P_{1N} \geqslant P_1 \cdot f_1 \cdot f_2 \cdot S_F$=165x1.4x1x1.4=323kW

Refer to transmission capacity table B3, select size 14 P_{1N}=340kW

3.33 · P_1=3.33x165=549kW⩾P_{1N} Satisfy requirements

3.Peak torque verification

$P_{1N} \geqslant T_A \cdot n_1 \cdot f_3/9550$ =1850 × 1450 × 0.65/9550=183kW

P_{1N}=340kW⩾183kW Satisfy requirements

4.Verify thermal capacity:

$P_{GA} \cdot f_4 \cdot f_8$=135 × 0.75 × 1=101kW⩽$P_1$=165kW

Thermal capacity not sufficient

$P_{GB} \cdot f_4 \cdot f_8$=330 × 0.75 × 1=248kW⩾$P_1$=165kW

Thermal capacity is sufficient

When gear unit with cooling fan, thermal capacity is sufficient.

Fan accessory code is UF 21

5.Determine gear unit type:B314HSC–C56+UF21+UB11

7 Transmission Capacity table:

H2(iN=3.15-20):

Code	iN	n1 (r/min)	n2N (r/min)	H213			H214			H215		
				T2N (kN·m)	iex	P1N (kW)	T2N (kN·m)	iex	P1N (kW)	T2N (kN·m)	iex	P1N (kW)
B32	3.15	1740	552.4				80	3.061	4762			
		1450	460.3						3968			
		1150	365.1						3147			
		960	304.8						2627			
B36	3.55	1740	490.1				90	3.429	4782			
		1450	408.5						3985			
		1150	323.9						3161			
		960	270.4						2638			
B40	4	1740	435.0				100	3.929	4637			
		1450	362.5						3864			
		1150	287.5						3065			
		960	240.0						2559			
B45	4.5	1740	386.7				100	4.387	4153			
		1450	322.2						3461			
		1150	255.6						2745			
		960	213.3						2291			
B50	5	1740	348.0				90	4.916	3336			
		1450	290.0						2780			
		1150	230.0						2205			
		960	192.0						1840			
B56	5.6	1740	310.7				90	5.558	2950			
		1450	258.9						2459			
		1150	205.4						1950			
		960	171.4						1628			
B63	6.3	1740	276.2	86	5.878	2666	117	5.882	3624	143	6.000	4342*
		1450	230.2			2221			3020			3619
		1150	182.5			1762			2395			2870
		960	152.4			1471			1999			2396
B71	7.1	1740	245.1	86	6.583	2380	117	6.588	3236	143	7.022	3711*
		1450	204.2			1983			2696			3092
		1150	162.0			1573			2139			2452
		960	135.2			1313			1785			2047
B80	8	1740	217.5	86	7.543	2077	117	7.549	2824	143	8.000	3257*
		1450	181.3			1731			2353			2714
		1150	143.8			1373			1866			2152
		960	120.0			1146			1558			1797
B90	9	1740	193.3	86	8.423	1860	117	8.429	2529	143	8.742	2980*
		1450	161.1			1550			2108			2484
		1150	127.8			1230			1671			1970
		960	106.7			1026			1395			1644
C10	10	1740	174.0	86	9.439	1660	117	9.446	2257	143	9.882	2636*
		1450	145.0			1383			1881			2197
		1150	115.0			1097			1491			1742
		960	96.0			916			1245			1455
C11	11.2	1740	155.4	86	10.671	1468	117	10.679	1996	143	10.900	2390*
		1450	129.5			1224			1663			1992
		1150	102.7			970			1319			1580
		960	85.7			810			1101			1319
C13	12.5	1740	139.2	86	11.918	1315	117	11.927	1787	143	12.208	2134*
		1450	116.0			1096			1489			1779
		1150	92.0			869			1181			1411
		960	76.8			725			986			1178
C14	14	1740	124.3	86	13.621	1150	117	13.631	1564	143	13.708	1901*
		1450	103.6			959			1303			1584
		1150	82.1			760			1034			1256
		960	68.6			635			863			1049
C16	16	1740	108.8	86	15.762	994	117	15.774	1351	143	15.164	1718*
		1450	90.6			828			1126			1432
		1150	71.9			657			893			1136
		960	60.0			548			746			948
C18	18	1740	96.7	86	17.487	896	117	17.500	1218	143	17.209	1514*
		1450	80.6			747			1015			1262
		1150	63.9			592			805			1001
		960	53.3			494			672			835
C20	20	1740	87.0	86	19.526	802	117	19.540	1091			
		1450	72.5			669			909			
		1150	57.5			530			721			
		960	48.0			443			602			

Note: Forced lubrication required on horizontal gearbox.
* On request.

H216			H217			H218			n_{2N}	n_1	i_N	Code
T_{2N} (kN·m)	i_{ex}	P_{1N} (kW)	T_{2N} (kN·m)	i_{ex}	P_{1N} (kW)	T_{2N} (kN·m)	i_{ex}	P_{1N} (kW)	(r/min)	(r/min)		
125	3.148	7235							552.4	1740	3.15	B32
		6029							460.3	1450		
		4782							365.1	1150		
		3992							304.8	960		
144	3.684	7122				172	3.474	9021	490.1	1740	3.55	B36
		5935						7517	408.5	1450		
		4707						5962	323.9	1150		
		3929						4977	270.4	960		
130	4.198	5642				195	4.055	8762	435.0	1740	4	B40
		4702						7301	362.5	1450		
		3729						5791	287.5	1150		
		3113						4834	240.0	960		
130	4.587	5164				190	4.628	7480	386.7	1740	4.5	B45
		4303						6233	322.2	1450		
		3413						4944	255.6	1150		
		2849						4127	213.3	960		
135	5.185	4744				177	5.251	6142	348.0	1740	5	B50
		3953						5118	290.0	1450		
		3135						4059	230.0	1150		
		2617						3388	192.0	960		
130	5.719	4142	215	5.462		177	5.726	5632	310.7	1740	5.6	B56
		3451			5977			4693	258.9	1450		
		2737			4740			3722	205.4	1150		
		2285			3957			3107	171.4	960		
176	5.996	5348*	215	6.374		255	6.305		276.2	1740	6.3	B63
		4457			5121				230.2	1450		
		3535			4062			4870	182.5	1150		
		2951			3391			4065	152.4	960		
176	7.016	4570*	215	7.276		255	7.359		245.1	1740	7.1	B71
		3809			4486				204.2	1450		
		3021			3558			4173	162.0	1150		
		2522			2970			3483	135.2	960		
176	7.994	4011*	215	8.255	4745*	255	8.400		217.5	1740	8	B80
		3343			3954			4609	181.3	1450		
		2651			3136			3656	143.8	1150		
		2213			2618			3052	120.0	960		
176	8.736	3671*	215	9.003	4351*	255	9.530	4875*	193.3	1740	9	B90
		3059			3626			4063	161.1	1450		
		2426			2876			3222	127.8	1150		
		2025			2401			2690	106.7	960		
176	9.875	3247*	215	10.119	3871*	255	10.393	4470*	174.0	1740	10	C10
		2706			3226			3725	145.0	1450		
		2146			2559			2955	115.0	1150		
		1792			2136			2466	96.0	960		
176	10.892	2944*	215	11.101	3529*	255	11.681	3977*	155.4	1740	11.2	C11
		2454			2941			3314	129.5	1450		
		1946			2332			2629	102.7	1150		
		1624			1947			2194	85.7	960		
176	12.199	2629*	215	12.392	3161*	255	12.816	3625*	139.2	1740	12.5	C13
		2191			2634			3021	116.0	1450		
		1737			2089			2396	92.0	1150		
		1450			1744			2000	76.8	960		
176	13.698	2341*	215	13.875	2823*	255	14.306	3248*	124.3	1740	14	C14
		1951			2353			2706	103.6	1450		
		1547			1866			2146	82.1	1150		
		1292			1558			1792	68.6	960		
176	15.153	2116*	215	15.285	2563*	255	16.017	2901*	108.8	1740	16	C16
		1764			2136			2417	90.6	1450		
		1399			1694			1917	71.9	1150		
		1168			1414			1600	60.0	960		
176	17.196	1865*	215	17.253	2271*	255	17.646	2633*	96.7	1740	18	C18
		1554			1892			2194	80.6	1450		
		1232			1501			1740	63.9	1150		
		1029			1253			1453	53.3	960		
						255	19.917	2333*	87.0	1740	20	C20
								1944	72.5	1450		
								1542	57.5	1150		
								1287	48.0	960		

Note: Forced lubrication required on horizontal gearbox.
* On request.

H3(iN=14-112):

Code	iN	n_1 (r/min)	n_{2N} (r/min)	H313			H314			H315		
				T2N (kN· m)	iex	P1N (kW)	T2N (kN· m)	iex	P1N (kW)	T2N (kN· m)	iex	P1N (kW)
C14	14	1740	124.3									
		1450	103.6									
		1150	82.1									
		960	68.6									
C16	16	1740	108.8	88	14.974	1071	120	14.985	1459	153	15.047	1853
		1450	90.6			892			1216			1544
		1150	71.9			708			964			1224
		960	60.0			591			805			1022
C18	18	1740	96.7	88	16.884	950	120	16.897	1294	153	17.091	1631
		1450	80.6			791			1078			1359
		1150	63.9			628			855			1078
		960	53.3			524			714			900
C20	20	1740	87.0	88	19.502	822	120	19.517	1120	153	19.466	1432
		1450	72.5			685			934			1193
		1150	57.5			543			740			946
		960	48.0			454			618			790
C22	22.4	1740	77.7	88	22.247	721	120	22.264	982	153	21.285	1310
		1450	64.7			601			818			1091
		1150	51.3			476			649			866
		960	42.9			398			542			723
C25	25	1740	69.6	88	23.836	673	120	23.854	917	153	23.737	1174
		1450	58.0			561			764			979
		1150	46.0			445			606			776
		960	38.4			371			506			648
C28	28	1740	62.1	88	27.606	581	120	27.626	791	153	27.005	1032
		1450	51.8			484			660			860
		1150	41.1			384			523			682
		960	34.3			320			437			570
C32	31.5	1740	55.2	88	31.127	515	120	31.150	702	153	30.553	912
		1450	46.0			429			585			760
		1150	36.5			340			464			603
		960	30.5			284			387			503
C36	35.5	1740	49.0	88	35.954	446	120	35.981	608	153	34.800	801
		1450	40.8			372			506			668
		1150	32.4			295			402			529
		960	27.0			246			335			442
C40	40	1740	43.5	88	41.014	391	120	41.045	533	153	38.051	733
		1450	36.3			326			444			611
		1150	28.8			258			352			484
		960	24.0			216			294			404
C45	45	1740	38.7	88	43.944	365	120	43.976	497	153	42.435	657
		1450	32.2			304			414			547
		1150	25.6			241			329			434
		960	21.3			201			274			362
C50	50	1740	34.8	88	47.488	338	120	47.523	460	153	48.276	577
		1450	29.0			281			383			481
		1150	23.0			223			304			382
		960	19.2			186			254			319
C56	56	1740	31.1	88	54.930	292	120	54.971	398	153	54.559	511
		1450	25.9			243			331			426
		1150	20.5			193			263			338
		960	17.1			161			219			282
C63	63	1740	27.6	88	61.370	261	120	61.415	356	153	62.655	445
		1450	23.0			218			297			371
		1150	18.3			173			235			294
		960	15.2			144			196			245
C71	71	1740	24.5	88	69.171	232	120	69.222	316	153	71.706	389
		1450	20.4			193			263			324
		1150	16.2			153			209			257
		960	13.5			128			174			214
C80	80	1740	21.8	88	76.462	210	120	76.519	286	153	79.016	353
		1450	18.1			175			238			294
		1150	14.4			139			189			233
		960	12.0			116			158			195
C90	90	1740	19.3	88	85.977	186	120	86.041	254	153	88.911	314
		1450	16.1			155			212			261
		1150	12.8			123			168			207
		960	10.7			103			140			173
D10	100	1740	17.4	88	95.211	168	120	95.282	229	153	97.769	285
		1450	14.5			140			191			238
		1150	11.5			111			152			188
		960	9.6			93			127			157
D11	112	1740	15.5							153	109.118	255
		1450	12.9									213
		1150	10.3									169
		960	8.6									141

H316			H317			H318			n_{2N}	n_1	iN	Code
T2N (kN· m)	iex	P1N (kW)	T2N (kN· m)	iex	P1N (kW)	T2N (kN· m)	iex	P1N (kW)	(r/min)	(r/min)		
			220	13.683	2929				124.3	1740	14	C14
					2441				103.6	1450		
					1936				82.1	1150		
					1616				68.6	960		
190	15.035	2302	220	15.542	2579	265	15.796	3057	108.8	1740	16	C16
		1919			2149			2547	90.6	1450		
		1522			1705			2020	71.9	1150		
		1270			1423			1686	60.0	960		
190	17.078	2027	220	17.702	2264	265	17.942	2691	96.7	1740	18	C18
		1689			1887			2243	80.6	1450		
		1340			1497			1779	63.9	1150		
		1118			1249			1485	53.3	960		
190	19.452	1780	220	19.356	2071	265	20.436	2363	87.0	1740	20	C20
		1483			1726			1969	72.5	1450		
		1176			1369			1562	57.5	1150		
		982			1143			1304	48.0	960		
190	21.269	1628	220	21.586	1857	265	22.345	2161	77.7	1740	22.4	C22
		1356			1547			1801	64.7	1450		
		1076			1227			1428	51.3	1150		
		898			1025			1192	42.9	960		
190	23.719	1459	220	24.557	1632	265	24.919	1938	69.6	1740	25	C25
		1216			1360			1615	58.0	1450		
		965			1079			1281	46.0	1150		
		805			901			1069	38.4	960		
190	26.985	1283	220	27.650	1450	265	28.350	1703	62.1	1740	28	C28
		1069			1208			1419	51.8	1450		
		848			958			1126	41.1	1150		
		708			800			940	34.3	960		
190	30.530	1134	220	31.493	1273	265	31.920	1513	55.2	1740	31.5	C32
		945			1061			1261	46.0	1450		
		749			841			1000	36.5	1150		
		626			702			835	30.5	960		
190	34.774	996	220	34.436	1164	265	36.357	1328	49.0	1740	35.5	C36
		830			970			1107	40.8	1450		
		658			769			878	32.4	1150		
		549			642			733	27.0	960		
190	38.023	910	220	38.403	1044	265	39.754	1215	43.5	1740	40	C40
		759			870			1012	36.3	1450		
		602			690			803	28.8	1150		
		502			576			670	24.0	960		
190	42.403	816	220	43.689	917	265	44.333	1089	38.7	1740	45	C45
		680			765			908	32.2	1450		
		540			606			720	25.6	1150		
		450			506			601	21.3	960		
190	48.240	718	220	49.375	812	265	50.436	957	34.8	1740	50	C50
		598			677			798	29.0	1450		
		474			537			633	23.0	1150		
		396			448			528	19.2	960		
190	54.518	635	220	56.702	707	265	57.000	847	31.1	1740	56	C56
		529			589			706	25.9	1450		
		420			467			560	20.5	1150		
		350			390			467	17.1	960		
190	62.608	553	220	64.893	618	265	65.458	738	27.6	1740	63	C63
		461			515			615	23.0	1450		
		365			408			488	18.3	1150		
		305			341			407	15.2	960		
190	71.653	483	220	71.509	561	265	74.914	645	24.5	1740	71	C71
		403			467			537	20.4	1450		
		319			370			426	16.2	1150		
		267			309			356	13.5	960		
190	78.957	438	220	80.463	498	265	82.552	585	21.8	1740	80	C80
		365			415			487	18.1	1450		
		290			329			387	14.4	1150		
		242			275			323	12.0	960		
190	88.845	390	220	88.480	453	265	92.889	520	19.3	1740	90	C90
		325			378			433	16.1	1450		
		258			299			344	12.8	1150		
		215			250			287	10.7	960		
190	97.697	354	220	98.750	406	265	102.144	473	17.4	1740	100	D10
		295			338			394	14.5	1450		
		234			268			312	11.5	1150		
		195			224			261	9.6	960		
190	109.036	317				265	114.000	424	15.5	1740	112	D11
		265						353	12.9	1450		
		210						280	10.3	1150		
		175						234	8.6	960		

H4(iN=63-450):

Code	iN	n_1 (r/min)	n_{2N} (r/min)	H413			H414			H415		
				T2N (kN· m)	iex	P1N (kW)	T2N (kN· m)	iex	P1N (kW)	T2N (kN· m)	iex	P1N (kW)
C63	63	1740	27.6									
		1450	23.0									
		1150	18.3									
		960	15.2									
C71	71	1740	24.5	91	67.606	245	125	67.656	337	153	67.549	413
		1450	20.4			204			281			344
		1150	16.2			162			222			273
		960	13.5			135			186			228
C80	80	1740	21.8	91	75.714	219	125	75.770	301	153	75.543	369
		1450	18.1			182			250			308
		1150	14.4			145			199			244
		960	12.0			121			166			204
C90	90	1740	19.3	91	89.261	186	125	89.327	255	153	84.050	332
		1450	16.1			155			212			276
		1150	12.8			123			169			219
		960	10.7			102			141			183
D10	100	1740	17.4	91	96.850	171	125	96.922	235	153	94.676	294
		1450	14.5			143			196			245
		1150	11.5			113			155			195
		960	9.6			94			130			162
D11	112	1740	15.5	91	113.091	147	125	113.175	201	153	109.118	255
		1450	12.9			122			168			213
		1150	10.3			97			133			169
		960	8.6			81			111			141
D13	125	1740	13.9	91	125.308	132	125	125.402	182	153	120.406	232
		1450	11.6			110			151			193
		1150	9.2			87			120			153
		960	7.7			73			100			128
D14	140	1740	12.4	91	131.237	126	125	131.335	173	153	141.544	197
		1450	10.4			105			145			164
		1150	8.2			83			115			130
		960	6.9			70			96			109
D16	160	1740	10.9	91	154.719	107	125	154.834	147	153	157.483	177
		1450	9.1			89			123			148
		1150	7.2			71			97			117
		960	6.0			59			81			98
D18	180	1740	9.7	91	167.873	99	125	167.998	136	153	177.392	157
		1450	8.1			82			113			131
		1150	6.4			65			90			104
		960	5.3			54			75			87
D20	200	1740	8.7	91	196.024	85	125	196.170	116	153	204.452	136
		1450	7.3			70			97			114
		1150	5.8			56			77			90
		960	4.8			47			64			75
D22	224	1740	7.8	91	217.201	76	125	217.363	105	153	225.602	124
		1450	6.5			64			87			103
		1150	5.1			50			69			82
		960	4.3			42			58			68
D25	250	1740	7.0	91	230.350	72	125	230.522	99	153	249.886	112
		1450	5.8			60			82			93
		1150	4.6			48			65			74
		960	3.8			40			55			62
D28	280	1740	6.2	91	261.832	63	125	262.026	87	153	278.055	100
		1450	5.2			53			72			84
		1150	4.1			42			57			66
		960	3.4			35			48			55
D32	315	1740	5.5	91	325.306	51	125	325.548	70	153	315.567	88
		1450	4.6			42			58			74
		1150	3.7			34			46			58
		960	3.0			28			39			49
D36	355	1740	4.9	91	380.846	44	125	381.129	60	153	350.489	80
		1450	4.1			36			50			66
		1150	3.2			29			39			53
		960	2.7			24			33			44
D40	400	1740	4.4	91	409.409	40	125	409.714	56	153	398.143	70
		1450	3.6			34			46			58
		1150	2.9			27			37			46
		960	2.4			22			31			39
D45	450	1740	3.9	91	460.189	36	125	460.531	49	153	457.010	61
		1450	3.2			30			41			51
		1150	2.6			24			33			40
		960	2.1			20			27			34

H416			H417			H418			n_{2N} (r/min)	n_1 (r/min)	iN	Code
T2N (kN· m)	iex	P1N (kW)	T2N (kN· m)	iex	P1N (kW)	T2N (kN· m)	iex	P1N (kW)				
			220	61.131	656				27.6	1740	63	C63
					546				23.0	1450		
					433				18.3	1150		
					362				15.2	960		
190	67.499	513	220	68.365	586	265	70.571	684	24.5	1740	71	C71
		427			489			570	20.4	1450		
		339			388			452	16.2	1150		
		283			323			377	13.5	960		
190	75.487	459	220	76.064	527	265	78.923	612	21.8	1740	80	C80
		382			439			510	18.1	1450		
		303			348			404	14.4	1150		
		253			291			338	12.0	960		
190	83.988	412	220	85.680	468	265	87.811	550	19.3	1740	90	C90
		343			390			458	16.1	1450		
		272			309			363	12.8	1150		
		227			258			303	10.7	960		
190	94.605	366	220	98.750	406	265	98.912	488	17.4	1740	100	D10
		305			338			407	14.5	1450		
		242			268			323	11.5	1150		
		202			224			269	9.6	960		
190	109.036	317	220	108.966	368	265	114.000	424	15.5	1740	112	D11
		265			307			353	12.9	1450		
		210			243			280	10.3	1150		
		175			203			234	8.6	960		
190	120.316	288	220	128.095	313	265	125.793	384	13.9	1740	125	D13
		240			261			320	11.6	1450		
		190			207			254	9.2	1150		
		159			173			212	7.7	960		
190	141.438	245	220	142.520	281	265	147.877	327	12.4	1740	140	D14
		204			234			272	10.4	1450		
		162			186			216	8.2	1150		
		135			155			180	6.9	960		
190	157.366	220	220	160.538	250	265	164.530	293	10.9	1740	160	D16
		183			208			245	9.1	1450		
		145			165			194	7.2	1150		
		121			138			162	6.0	960		
190	177.260	195	220	185.026	217	265	185.329	261	9.7	1740	180	D18
		163			181			217	8.1	1450		
		129			143			172	6.4	1150		
		108			120			144	5.3	960		
190	204.300	169	220	204.167	196	265	213.600	226	8.7	1740	200	D20
		141			164			188	7.3	1450		
		112			130			149	5.8	1150		
		93			108			125	4.8	960		
190	225.434	154	220	226.143	177	265	235.697	205	7.8	1740	224	D22
		128			148			171	6.5	1450		
		101			117			135	5.1	1150		
		85			98			113	4.3	960		
190	249.700	139	220	251.636	159	265	261.067	185	7.0	1740	250	D25
		116			133			154	5.8	1450		
		92			105			122	4.6	1150		
		76			88			102	3.8	960		
190	277.848	125	220	285.584	140	265	290.496	166	6.2	1740	280	D28
		104			117			139	5.2	1450		
		82			93			110	4.1	1150		
		69			77			92	3.4	960		
190	315.332	110	220	317.188	126	265	329.687	146	5.5	1740	315	D32
		91			105			122	4.6	1450		
		73			84			97	3.7	1150		
		61			70			81	3.0	960		
190	350.228	99	220	360.314	111	265	366.171	132	4.9	1740	355	D36
		82			93			110	4.1	1450		
		65			74			87	3.2	1150		
		55			61			73	2.7	960		
190	397.847	87	220	413.588	97	265	415.958	116	4.4	1740	400	D40
		73			81			97	3.6	1450		
		58			64			77	2.9	1150		
		48			53			64	2.4	960		
190	456.670	76				265	477.459	101	3.9	1740	450	D45
		63						84	3.2	1450		
		50						67	2.6	1150		
		42						56	2.1	960		

B2(iN=6.3-14):

Code	iN	n_1 (r/min)	n_{2N} (r/min)	B213			B214			B215		
				T_{2N} (kN·m)	i_{ex}	P_{1N} (kW)	T_{2N} (kN·m)	i_{ex}	P_{1N} (kW)	T_{2N} (kN·m)	i_{ex}	P_{1N} (kW)
B63	6.3	1740	276.2	76	6.172	2244*	96	6.176	2832*	130	6.176	3835*
		1450	230.2			1870			2360			3196*
		1150	182.5			1483			1872			2535*
		960	152.4			1238			1562			2116
B71	7.1	1740	245.1	76	6.957	1990*	96	6.963	2512*	132	6.963	3454*
		1450	204.2			1659			2093			2879*
		1150	162.0			1315			1660			2283*
		960	135.2			1098			1386			1906
B80	8	1740	217.5	82	8.056	1855*	104	8.062	2350*	132	8.062	2983*
		1450	181.3			1545			1959			2486
		1150	143.8			1226			1553			1972
		960	120.0			1023			1297			1646
B90	9	1740	193.3	82	8.713	1715*	104	8.720	2173*	132	8.720	2758*
		1450	161.1			1429			1811			2298
		1150	127.8			1133			1436			1823
		960	106.7			946			1199			1522
C10	10	1740	174.0	82	10.204	1464*	109	10.212	1945*	132	10.212	2355*
		1450	145.0			1220			1621			1963
		1150	115.0			968			1285			1557
		960	96.0			808			1073			1299
C11	11.2	1740	155.4	82	10.863	1375*	111	10.871	1860*	132	10.871	2212*
		1450	129.5			1146			1550			1844
		1150	102.7			909			1230			1462
		960	85.7			759			1026			1221
C13	12.5	1740	139.2	82	12.534	1192*	111	12.543	1612*	132	12.543	1917*
		1450	116.0			993			1344			1598
		1150	92.0			788			1066			1267
		960	76.8			658			890			1058
C14	14	1740	124.3	82	13.578	1100*	111	13.588	1488*	132	13.588	1770*
		1450	103.6			917			1240			1475
		1150	82.1			727			984			1170
		960	68.6			607			821			977

Note: Forced lubricati on required on horizontal gearbox.
* On request.

B216			B217			B218			n_{2N} (r/min)	n_1 (r/min)	i_N	Code
T_{2N} (kN·m)	i_{ex}	P_{1N} (kW)	T_{2N} (kN·m)	i_{ex}	P_{1N} (kW)	T_{2N} (kN·m)	i_{ex}	P_{1N} (kW)				
160	6.172	4723*	215	6.184					276.2	1740	6.3	B63
		3936*			5278*				230.2	1450		
		3122*			4189*				182.5	1150		
		2606			3495*				152.4	960		
160	6.957	4190*	215	7.161		253	7.139		245.1	1740	7.1	B71
		3492*			4559*				204.2	1450		
		2769*			3616*			4267*	162.0	1150		
		2312			3018			3562*	135.2	960		
163	8.056	3687*	215	7.745	5058*	253	8.267		217.5	1740	8	B80
		3072*			4215*			4647*	181.3	1450		
		2437*			3343*			3685*	143.8	1150		
		2034			2790			3077	120.0	960		
163	8.713	3408*	215	9.070	4319*	253	8.941	5156*	193.3	1740	9	B90
		2840			3599*			4296*	161.1	1450		
		2253			2854*			3407*	127.8	1150		
		1881			2383			2844	106.7	960		
163	10.204	2910*	215	9.948	3938*	253	10.471	4402*	174.0	1740	10	C10
		2425			3281*			3669*	145.0	1450		
		1924			2602*			2910*	115.0	1150		
		1606			2173			2429	96.0	960		
163	10.863	2734*	215	11.141	3516*	253	11.484	4014*	155.4	1740	11.2	C11
		2278			2930*			3345*	129.5	1450		
		1807			2324*			2653*	102.7	1150		
		1508			1940			2215	85.7	960		
163	12.534	2369*	215	12.069	3246*	253	12.862	3584*	139.2	1740	12.5	C13
		1975			2705*			2987*	116.0	1450		
		1566			2145*			2369*	92.0	1150		
		1307			1791			1977	76.8	960		
163	13.578	2187*	215	13.606	2879*	253	13.933	3308*	124.3	1740	14	C14
		1823			2399			2757*	103.6	1450		
		1446			1903			2187*	82.1	1150		
		1207			1589			1825	68.6	960		

Note: Forced lubricati on required on horizontal gearbox.
* On request.

B3 (iN=16-90)

Code	iN	n_1 (r/min)	n_{2N} (r/min)	B313			B314			B315		
				T2N (kN· m)	iex	P1N (kW)	T2N (kN· m)	iex	P1N (kW)	T2N (kN· m)	iex	P1N (kW)
C16	16	1740	108.8	91	14.898	1113	112	14.909	1369	148	15.260	1767*
		1450	90.6			927			1141			1473
		1150	71.9			736			905			1168
		960	60.0			614			755			975
C18	18	1740	96.7	91	16.794	987	112	16.806	1214	148	17.202	1568*
		1450	80.6			823			1012			1306
		1150	63.9			653			802			1036
		960	53.3			545			670			865
C20	20	1740	87.0	91	19.445	853	119	19.460	1114	153	19.918	1400*
		1450	72.5			711			928			1166
		1150	57.5			564			736			925
		960	48.0			470			615			772
C22	22.4	1740	77.7	91	21.032	788	119	21.048	1030	153	21.543	1294*
		1450	64.7			657			858			1078
		1150	51.3			521			681			855
		960	42.9			435			568			714
C25	25	1740	69.6	91	23.836	696	125	23.854	955	153	24.415	1142*
		1450	58.0			580			796			951
		1150	46.0			460			631			755
		960	38.4			384			527			630
C28	28	1740	62.1	91	27.465	604	125	27.485	829	153	27.279	1022*
		1450	51.8			503			691			852
		1150	41.1			399			548			675
		960	34.3			333			457			564
C32	31.5	1740	55.2	91	30.960	536	125	30.983	735	153	30.751	907*
		1450	46.0			446			613			755
		1150	36.5			354			486			599
		960	30.5			295			406			500
C36	35.5	1740	49.0	91	35.849	463	125	35.876	635	153	35.607	783*
		1450	40.8			385			529			652
		1150	32.4			306			420			517
		960	27.0			255			350			432
C40	40	1740	43.5	91	38.774	428	125	38.803	587	153	38.512	724*
		1450	36.3			356			489			603
		1150	28.8			283			388			478
		960	24.0			236			324			399
C45	45	1740	38.7	91	43.944	377	125	43.976	518	153	43.647	639*
		1450	32.2			314			432			532
		1150	25.6			249			342			422
		960	21.3			208			286			352
C50	50	1740	34.8	91	48.338	343	125	48.374	471	153	48.012	581
		1450	29.0			286			392			484
		1150	23.0			227			311			384
		960	19.2			189			260			320
C56	56	1740	31.1	91	55.775	297	125	55.816	408	153	55.398	503
		1450	25.9			248			340			419
		1150	20.5			196			270			333
		960	17.1			164			225			278
C63	63	1740	27.6	91	60.423	274	125	60.468	377	153	60.015	464
		1450	23.0			229			314			387
		1150	18.3			181			249			307
		960	15.2			151			208			256
C71	71	1740	24.5	91	68.113	243	125	68.164	334	153	67.653	412
		1450	20.4			203			278			343
		1150	16.2			161			221			272
		960	13.5			134			184			227
C80	80	1740	21.8	91	78.122	212	125	78.180	291	153	77.595	359
		1450	18.1			177			243			299
		1150	14.4			140			193			237
		960	12.0			117			161			198
C90	90	1740	19.3	91	85.141	195	125	85.204	267	153	84.566	330
		1450	16.1			162			223			275
		1150	12.8			129			177			218
		960	10.7			107			147			182

Note: Forced lubricati on required on horizontal gearbox.
* On request.

B316			B317			B318			n_{2N}	n_1	iN	Code
T2N (kN· m)	iex	P1N (kW)	T2N (kN· m)	iex	P1N (kW)	T2N (kN· m)	iex	P1N (kW)	(r/min)	(r/min)		
183	15.248	2187*	220	15.643	2562*	253	16.020	2877*	108.8	1740	16	C16
		1822			2135			2398	90.6	1450		
		1445			1694			1902	71.9	1150		
		1206			1414			1588	60.0	960		
183	17.189	1940*	220	18.113	2213*	265	18.058	2674*	96.7	1740	18	C18
		1616			1844			2228	80.6	1450		
		1282			1463			1767	63.9	1150		
		1070			1221			1475	53.3	960		
183	19.903	1675*	220	19.591	2046*	265	20.910	2309*	87.0	1740	20	C20
		1396			1705			1924	72.5	1450		
		1107			1352			1526	57.5	1150		
		924			1129			1274	48.0	960		
190	21.527	1608*	220	22.943	1747*	265	22.616	2135*	77.7	1740	22.4	C22
		1340			1456			1779	64.7	1450		
		1063			1155			1411	51.3	1150		
		887			964			1178	42.9	960		
190	24.397	1419*	220	24.688	1624*	265	26.486	1823*	69.6	1740	25	C25
		1182			1353			1519	58.0	1450		
		938			1073			1205	46.0	1150		
		783			896			1006	38.4	960		
190	27.259	1270*	220	27.830	1440*	265	28.500	1694*	62.1	1740	28	C28
		1058			1200			1412	51.8	1450		
		839			952			1120	41.1	1150		
		701			795			935	34.3	960		
190	30.728	1127*	220	32.224	1244*	265	32.127	1503*	55.2	1740	31.5	C32
		939			1037			1252	46.0	1450		
		745			822			993	36.5	1150		
		622			686			829	30.5	960		
190	35.580	973*	220	34.853	1150*	265	37.200	1298*	49.0	1740	35.5	C36
		811			958			1082	40.8	1450		
		643			760			858	32.4	1150		
		537			635			716	27.0	960		
190	38.483	900*	220	40.817	982*	265	40.235	1200*	43.5	1740	40	C40
		750			818			1000	36.3	1450		
		595			649			793	28.8	1150		
		496			542			662	24.0	960		
190	43.615	794*	220	43.450	923*	265	47.120	1025*	38.7	1740	45	C45
		661			769			854	32.2	1450		
		525			610			677	25.6	1150		
		438			509			565	21.3	960		
190	47.976	722*	220	50.135	800*	265	50.160	963*	34.8	1740	50	C50
		601			666			802	29.0	1450		
		477			528			636	23.0	1150		
		398			441			531	19.2	960		
190	55.357	625	220	54.313	738*	265	57.877	834*	31.1	1740	56	C56
		521			615			695	25.9	1450		
		413			488			551	20.5	1150		
		345			407			460	17.1	960		
190	59.970	577	220	61.225	655*	265	62.700	770*	27.6	1740	63	C63
		481			546			642	23.0	1450		
		382			433			509	18.3	1150		
		318			361			425	15.2	960		
190	67.603	512	220	70.222	571*	265	70.680	683*	24.5	1740	71	C71
		427			476			569	20.4	1450		
		338			377			451	16.2	1150		
		283			315			377	13.5	960		
190	77.537	446	220	76.531	524*	265	81.067	596*	21.8	1740	80	C80
		372			436			496	18.1	1450		
		295			346			394	14.4	1150		
		246			289			329	12.0	960		
190	84.503	410				265	88.350	546*	19.3	1740	90	C90
		341						455	16.1	1450		
		271						361	12.8	1150		
		226						302	10.7	960		

Note: Forced lubricati on required on horizontal gearbox.
* On request.

B4(iN=90-400):

Code	iN	n_1 (r/min)	n_{2N} (r/min)	B413			B414			B415		
				T_{2N} (kN·m)	i_{ex}	P_{1N} (kW)	T_{2N} (kN·m)	i_{ex}	P_{1N} (kW)	T_{2N} (kN·m)	i_{ex}	P_{1N} (kW)
C90	90	1740	19.3									
		1450	16.1									
		1150	12.8									
		960	10.7									
D10	100	1740	17.4	91	96.935	171	125	97.007	235	153	96.280	290
		1450	14.5			143			196			241
		1150	11.5			113			155			191
		960	9.6			94			130			160
D11	112	1740	15.5	91	109.859	151	125	109.941	207	153	109.118	255
		1450	12.9			126			173			213
		1150	10.3			100			137			169
		960	8.6			83			114			141
D13	125	1740	13.9	91	119.014	139	125	119.103	191	153	127.783	218
		1450	11.6			116			159			182
		1150	9.2			92			126			144
		960	7.7			77			106			120
D14	140	1740	12.4	91	134.162	124	125	134.261	170	153	144.046	194
		1450	10.4			103			141			161
		1150	8.2			82			112			128
		960	6.9			68			94			107
D16	160	1740	10.9	91	155.345	107	125	155.461	146	153	166.790	167
		1450	9.1			89			122			139
		1150	7.2			71			97			110
		960	6.0			59			81			92
D18	180	1740	9.7	91	168.020	99	125	168.145	135	153	180.399	155
		1450	8.1			82			113			129
		1150	6.4			65			90			102
		960	5.3			54			75			85
D20	200	1740	8.7	91	190.423	87	125	190.565	120	153	204.452	136
		1450	7.3			73			100			114
		1150	5.8			58			79			90
		960	4.8			48			66			75
D22	224	1740	7.8	91	209.465	79	125	209.621	109	153	224.897	124
		1450	6.5			66			91			103
		1150	5.1			52			72			82
		960	4.3			44			60			68
D25	250	1740	7.0	91	241.691	69	125	241.871	94	153	259.497	107
		1450	5.8			57			78			90
		1150	4.6			45			62			71
		960	3.8			38			52			59
D28	280	1740	6.2	91	261.832	63	125	262.026	87	153	281.122	99
		1450	5.2			53			72			83
		1150	4.1			42			57			66
		960	3.4			35			48			55
D32	315	1740	5.5	91	295.156	56	125	295.375	77	153	316.901	88
		1450	4.6			47			64			73
		1150	3.7			37			51			58
		960	3.0			31			43			49
D36	355	1740	4.9	91	338.530	49	125	338.782	67	153	363.470	77
		1450	4.1			41			56			64
		1150	3.2			32			44			51
		960	2.7			27			37			42
D40	400	1740	4.4	91	368.944	45	125	369.219	62	153	396.126	70
		1450	3.6			37			51			59
		1150	2.9			30			41			47
		960	2.4			25			34			39

B416			B417			B418			n_{2N} (r/min)	n_1 (r/min)	i_N	Code
T_{2N} (kN·m)	i_{ex}	P_{1N} (kW)	T_{2N} (kN·m)	i_{ex}	P_{1N} (kW)	T_{2N} (kN·m)	i_{ex}	P_{1N} (kW)				
			220	87.132	460				19.3	1740	90	C90
					383				16.1	1450		
					304				12.8	1150		
					254				10.7	960		
190	96.209	360	220	98.750	406	265	100.588	480	17.4	1740	100	D10
		300			338			400	14.5	1450		
		238			268			317	11.5	1150		
		199			224			265	9.6	960		
190	109.036	317	220	115.641	347	265	114.000	424	15.5	1740	112	D11
		265			289			353	12.9	1450		
		210			229			280	10.3	1150		
		175			191			234	8.6	960		
190	127.687	271	220	130.359	307	265	133.500	362	13.9	1740	125	D13
		226			256			301	11.6	1450		
		179			203			239	9.2	1150		
		150			170			200	7.7	960		
190	143.939	241	220	150.943	266	265	150.491	321	12.4	1740	140	D14
		200			221			267	10.4	1450		
		159			176			212	8.2	1150		
		133			147			177	6.9	960		
190	166.666	208	220	163.259	246	265	174.253	277	10.9	1740	160	D16
		173			205			231	9.1	1450		
		137			162			183	7.2	1150		
		115			135			153	6.0	960		
190	180.265	192	220	185.026	217	265	188.471	256	9.7	1740	180	D18
		160			181			213	8.1	1450		
		127			143			169	6.4	1150		
		106			120			141	5.3	960		
190	204.300	169	220	203.529	197	265	213.600	226	8.7	1740	200	D20
		141			164			188	7.3	1450		
		112			130			149	5.8	1150		
		93			109			125	4.8	960		
190	224.730	154	220	234.841	171	265	234.960	205	7.8	1740	224	D22
		128			142			171	6.5	1450		
		102			113			136	5.1	1150		
		85			94			113	4.3	960		
190	259.304	134	220	254.411	158	265	271.108	178	7.0	1740	250	D25
		111			131			148	5.8	1450		
		88			104			118	4.6	1150		
		74			87			98	3.8	960		
190	280.912	123	220	286.791	140	265	293.700	164	6.2	1740	280	D28
		103			116			137	5.2	1450		
		81			92			109	4.1	1150		
		68			77			91	3.4	960		
190	316.665	109	220	328.936	122	265	331.080	146	5.5	1740	315	D32
		91			102			122	4.6	1450		
		72			81			96	3.7	1150		
		60			67			80	3.0	960		
190	363.200	95	220	358.488	112	265	379.733	127	4.9	1740	355	D36
		79			93			106	4.1	1450		
		63			74			84	3.2	1150		
		53			62			70	2.7	960		
190	395.831	87				265	413.850	117	4.4	1740	400	D40
		73						97	3.6	1450		
		58						77	2.9	1150		
		48						64	2.4	960		

8 Rated thermal capacity(kW)

H2（kW）

Code	iN		H213				H214				H215			
			960	1150	1450	1740	960	1150	1450	1740	960	1150	1450	1740
B32	3.15	PGA					*	*	*	*				
		PGB					687	*	*	*				
		PGC					1516	1420	1571	1577				
		PGD					1990	1992	2275	2376				
B36	3.55	PGA					*	*	*	*				
		PGB					606	*	*	*				
		PGC					1469	1421	1529	1520				
		PGD					1933	1981	2206	2292				
B40	4	PGA					*	*	*	*				
		PGB					608	*	*	*				
		PGC					1400	1384	1458	1541				
		PGD					1861	1939	2106	2320				
B45	4.5	PGA					*	*	*	*				
		PGB					698	*	*	*				
		PGC					1336	1339	1464	1430				
		PGD					1778	1873	2113	2156				
B50	5	PGA					*	*	*	*				
		PGB					678	*	*	*				
		PGC					1255	1273	1350	1352				
		PGD					1681	1784	1951	2038				
B56	5.6	PGA					*	*	*	*				
		PGB					691	*	*	*				
		PGC					1244	1274	1268	1208				
		PGD					1670	1787	1831	1823				
B63	6.3	PGA	*	*	*	*	*	*	*	*	*	*	*	*
		PGB	579	415	442	*	632	486	523	376	563	*	*	*
		PGC	961	806	958	882	1031	960	928	942	1147	954	1014	822
		PGD	1553	1515	1793	1678	1690	1695	1736	1825	1782	1628	1824	1562
B71	7.1	PGA	*	*	*	*	*	*	*	*	*	*	*	*
		PGB	558	452	493	357	650	520	551	386	591	344	338	*
		PGC	930	860	954	902	1021	952	1002	1008	1114	957	1031	882
		PGD	1510	1497	1728	1710	1678	1682	1827	1906	1746	1636	1851	1666
B80	8	PGA	*	*	*	*	*	*	*	*	*	*	*	*
		PGB	591	484	537	436	656	526	580	453	613	407	422	*
		PGC	888	838	937	907	1010	946	1055	1013	1078	957	1045	935
		PGD	1455	1465	1700	1722	1658	1660	1923	1931	1696	1629	1860	1749
B90	9	PGA	166	*	*	*	180	*	*	*	*	*	*	*
		PGB	594	529	600	547	672	589	666	595	635	495	541	402
		PGC	844	821	927	928	979	947	1068	1062	3434	959	1066	1012
		PGD	1395	1436	1679	1755	1611	1651	1927	2003	1644	1635	1889	1877
C10	10	PGA	178	*	*	*	199	*	*	*	170	*	*	*
		PGB	587	549	631	611	673	624	715	683	640	545	612	526
		PGC	799	793	902	922	934	922	1047	1065	979	938	1053	1035
		PGD	1326	1386	1628	1736	1551	1616	1896	2013	1571	1598	1861	1913
C11	11.2	PGA	192	*	*	*	210	*	*	*	185	*	*	*
		PGB	601	582	674	675	665	638	738	733	632	569	648	600
		PGC	789	794	908	940	890	893	1019	1051	918	898	1015	1021
		PGD	1319	1393	1642	1775	1482	1561	1838	1980	1485	1535	1796	1886
C13	12.5	PGA	192	142	*	*	214	*	*	*	200	*	*	*
		PGB	572	567	660	677	648	638	742	756	637	596	685	662
		PGC	725	737	845	884	837	849	972	1014	902	894	1018	1038
		PGD	1212	1289	1523	1662	1401	1487	1755	1910	1459	1524	1790	1908
C14	14	PGA	191	152	*	*	226	176	*	*	204	*	*	*
		PGB	547	553	647	676	659	663	774	805	614	593	686	686
		PGC	672	690	793	836	830	850	976	1027	839	844	964	997
		PGD	1131	1211	1434	1578	1392	1489	1761	1933	1365	1440	1697	1832
C16	16	PGA	180	150	136	*	224	184	164	*	214	157	*	*
		PGB	501	514	603	639	626	640	751	792	617	610	710	727
		PGC	595	615	710	753	758	782	900	954	822	834	957	999
		PGD	1007	1085	1286	1424	1276	1372	1626	1797	1341	1426	1684	1836
C18	18	PGA	186	162	154	*	220	190	178	*	211	167	145	*
		PGB	506	528	621	667	598	621	731	782	583	590	690	722
		PGC	598	622	719	768	705	732	846	902	758	778	895	944
		PGD	1009	1093	1297	1446	1186	1286	1526	1698	1244	1333	1578	1736
C20	20	PGA					203	179	172	133				
		PGB					543	569	670	722				
		PGC					624	651	753	806				
		PGD					1056	1145	1360	1519				

*On request.

H216				H217				H218					iN	Code
960	1150	1450	1740	960	1150	1450	1740	960	1150	1450	1740			
*	*	*	*									PGA	3.15	B32
764	*	*	*									PGB		
1768	1245	1375	1104									PGC		
2215	1724	1951	1715									PGD		
*	*	*	*					*	*	*	*	PGA	3.55	B36
707	*	*	*					947	*	*	*	PGB		
1738	1281	1436	1189					1994	1502	1528	1582	PGC		
2172	1754	2068	1808					2629	2145	2280	2479	PGD		
*	*	*	*					*	*	*	*	PGA	4	B40
744	*	*	*					996	*	*	*	PGB		
1688	1289	1465	1282					1933	1517	1567	1711	PGC		
2126	1765	2101	1933					2572	2163	2325	2660	PGD		
*	*	*	*					*	*	*	*	PGA	4.5	B45
736	*	*	*					1016	*	*	*	PGB		
1639	1316	1525	1426					1864	1503	1568	1770	PGC		
2083	1796	2167	2123					2484	2134	2309	2726	PGD		
*	*	*	*					*	*	*	*	PGA	5	B50
702	*	*	*					1013	*	*	*	PGB		
1564	1297	1521	1480					1764	1451	1525	1758	PGC		
2009	1776	2160	2199					2358	2057	2237	2696	PGD		
*	*	*	*	*	*	*	*	*	*	*	*	PGA	5.6	B56
703	*	*	*	844	*	*	*	1032	*	*	*	PGB		
1484	1260	1489	1485	1603	1361	1609	1604	1717	1438	1520	1785	PGC		
1913	1720	2104	2193	2066	1857	2273	2369	2305	2038	2225	2730	PGD		
*	*	*	*	*	*	*	*	*	*	*	*	PGA	6.3	B63
553	*	*	*	625	*	*	*	633	*	*	*	PGB		
1178	949	1000	803	1389	1088	1128	816	1381	1062	1106	642	PGC		
1846	1642	1774	1559	2240	1954	2151	1661	2248	1940	1823	1568	PGD		
*	*	*	*	*	*	*	*	*	*	*	*	PGA	7.1	B71
589	*	*	*	683	*	*	*	659	*	*	*	PGB		
1158	976	1044	865	1351	1104	1166	918	1390	1106	1154	864	PGC		
1810	1670	1880	1644	2186	1971	2199	1832	2260	1997	2009	1759	PGD		
*	*	*	*	*	*	*	*	*	*	*	*	PGA	8	B80
620	386	390	*	733	*	*	*	719	*	*	*	PGB		
1126	982	1066	932	1319	1122	1206	1015	1354	1127	1200	975	PGC		
1772	1681	1910	1757	2154	2003	2261	2006	2203	2015	2260	1941	PGD		
*	*	*	*	*	*	*	*	*	*	*	*	PGA	9	B90
655	490	530	363	786	552	584	*	789	523	542	*	PGB		
1093	1002	1109	1037	1289	1160	1274	1164	1330	1178	1286	1150	PGC		
1736	1710	1970	1930	2120	2059	2360	2262	2191	2103	2400	2254	PGD		
168	*	*	*	*	*	*	*	*	*	*	*	PGA	10	C10
668	554	617	510	812	645	710	547	830	635	691	495	PGB		
1042	988	1106	1076	1267	1157	1289	1233	1289	1190	1319	1244	PGC		
1674	1691	1964	1999	2053	2051	2374	2387	2143	2121	2447	2418	PGD		
189	*	*	*	195	*	*	*	190	*	*	*	PGA	11.2	C11
669	591	669	604	815	698	784	679	847	705	787	655	PGB		
990	960	1083	1080	1174	1126	1266	1246	1242	1179	1321	1287	PGC		
1594	1638	1913	1994	1958	1994	2323	2393	2070	2092	2431	2478	PGD		
200	*	*	*	221	*	*	*	213	*	*	*	PGA	12.5	C13
656	604	691	656	833	748	851	786	844	742	840	754	PGB		
931	918	1042	1057	1144	1117	1263	1268	1176	1138	1284	1278	PGC		
1506	1566	1836	1945	1914	1976	2311	2426	1965	2017	2355	2451	PGD		
214	*	*	*	233	*	*	*	239	*	*	*	PGA	14	C14
659	629	726	717	814	761	875	846	860	792	906	861	PGB		
910	910	1038	1069	1071	1062	1209	1234	1145	1128	1280	1298	PGC		
1482	1557	1832	1969	1802	1883	2211	2358	1921	1998	2342	2482	PGD		
216	*	*	*	238	*	*	*	248	*	*	*	PGA	16	C16
634	620	721	731	782	754	873	872	837	797	919	905	PGB		
847	857	981	1020	996	1001	1143	1182	1073	1073	1222	1257	PGC		
1381	1463	1726	1875	1680	1772	2088	2253	1810	1901	2236	2401	PGD		
228	176	*	*	248	184	*	*	169	*	*	*	PGA	18	C18
638	640	748	777	768	762	888	912	805	790	919	934	PGB		
830	849	975	1026	951	968	1110	1161	994	1008	1154	1202	PGC		
1359	1453	1718	1885	1606	1710	2020	2206	1689	1792	2114	2299	PGD		
								258	196	*	*	PGA	20	C20
								787	785	915	944	PGB		
								945	963	1106	1159	PGC		
								1602	1708	2019	2209	PGD		

*On request.

H3（kW）

Code	iN		H313				H314				H315			
			960	1150	1450	1740	960	1150	1450	1740	960	1150	1450	1740
C14	14	PGA												
		PGB												
		PGC												
		PGD												
C16	16	PGA	218	185	188	120	235	212	183	*	264	201	185	*
		PGB	337	352	385	350	374	339	396	371	465	421	470	420
		PGC	500	539	595	629	570	588	680	721	801	846	945	962
		PGD	724	806	903	975	835	874	996	1082	1163	1174	1368	1402
C18	18	PGA	210	185	181	128	230	209	185	*	263	205	187	*
		PGB	324	336	370	354	366	337	394	374	452	411	467	427
		PGC	480	506	572	602	556	569	659	702	770	810	908	957
		PGD	696	743	868	926	803	843	971	1058	1128	1158	1325	1393
C20	20	PGA	198	173	171	137	228	206	186	137	260	208	192	*
		PGB	306	310	349	360	358	335	391	376	443	403	452	438
		PGC	453	486	540	581	531	554	633	674	748	774	880	914
		PGD	657	721	819	903	775	812	945	1024	1096	1103	1293	1362
C22	22.4	PGA	196	173	169	141	224	204	188	146	258	209	193	*
		PGB	303	295	346	352	346	328	385	380	432	393	463	446
		PGC	449	464	534	570	506	532	612	654	722	730	840	882
		PGD	650	681	811	881	741	779	908	998	1043	1059	1267	1350
C25	25	PGA	191	170	137	140	219	203	190	155	253	207	192	*
		PGB	294	288	338	345	337	326	382	387	420	385	456	439
		PGC	426	442	509	543	485	506	586	627	680	690	794	834
		PGD	617	647	771	839	709	748	884	962	986	1004	1201	1282
C28	28	PGA	186	170	169	148	214	193	191	165	254	216	206	*
		PGB	286	285	334	346	327	324	380	392	417	394	463	460
		PGC	400	417	480	515	469	487	561	601	656	671	773	818
		PGD	583	617	734	803	680	718	854	932	957	987	1179	1269
C32	31.5	PGA	184	171	173	157	211	194	196	176	252	222	217	179
		PGB	279	283	332	348	319	322	377	394	411	399	468	475
		PGC	384	402	464	500	445	465	536	577	626	646	744	794
		PGD	560	598	710	781	647	690	819	900	917	959	1143	1240
C36	35.5	PGA	180	171	175	164	206	194	198	184	244	222	222	194
		PGB	271	280	328	348	311	320	374	369	395	393	461	477
		PGC	365	385	444	481	418	440	507	549	580	604	696	746
		PGD	534	576	683	755	612	658	781	862	854	905	1075	1176
C40	40	PGA	174	167	172	164	201	192	197	186	237	219	221	199
		PGB	261	272	318	339	302	313	366	390	380	383	449	469
		PGC	345	364	420	456	399	422	486	527	546	571	658	710
		PGD	506	547	649	719	586	633	750	831	809	862	1024	1124
C45	45	PGA	167	161	166	159	194	186	192	183	237	220	223	203
		PGB	250	261	306	327	291	303	355	379	378	384	450	472
		PGC	324	343	396	430	380	402	463	502	535	561	647	698
		PGD	475	516	611	678	557	603	714	792	793	847	1006	1107
C50	50	PGA	166	164	171	170	190	187	195	193	241	232	240	231
		PGB	245	262	306	332	283	301	352	381	378	395	462	495
		PGC	315	337	388	424	358	382	441	481	530	561	647	703
		PGD	465	510	603	673	529	580	686	766	785	852	1009	1120
C56	56	PGA	161	161	170	171	183	183	192	194	232	228	239	236
		PGB	238	257	300	329	271	292	341	373	361	384	449	487
		PGC	298	320	369	404	337	361	417	456	494	526	607	663
		PGD	441	486	574	644	499	550	650	728	735	805	952	1063
C63	63	PGA	154	156	166	170	180	182	194	198	222	222	235	238
		PGB	226	247	288	317	265	289	338	372	343	371	434	475
		PGC	278	299	346	379	328	353	408	448	456	489	565	619
		PGD	411	456	538	606	486	540	637	716	681	753	889	998
C71	71	PGA	150	152	162	166	174	177	188	193	216	217	230	234
		PGB	219	239	279	308	255	279	325	359	333	361	422	463
		PGC	265	286	330	362	311	335	387	426	438	471	544	597
		PGD	393	436	515	580	461	512	605	681	655	725	857	962
C80	80	PGA	145	148	158	162	165	167	178	183	208	210	223	228
		PGB	213	233	272	300	241	264	308	340	320	348	406	447
		PGC	255	275	318	350	289	311	359	395	414	445	514	564
		PGD	378	420	496	559	429	478	564	635	620	688	812	912
C90	90	PGA	136	138	148	152	160	163	173	179	196	199	211	217
		PGB	199	218	255	282	233	256	298	330	301	328	383	422
		PGC	234	253	292	83	276	298	344	378	383	412	476	523
		PGD	348	388	458	516	409	455	537	605	573	637	752	846
D10	100	PGA	128	131	140	143	156	160	171	178	188	190	202	208
		PGB	193	210	248	276	227	251	293	325	290	318	374	401
		PGC	212	246	286	304	266	287	332	366	368	380	436	482
		PGD	327	367	436	462	394	441	520	587	543	600	702	806
D11	112	PGA									176	188	191	197
		PGB									281	309	360	390
		PGC									348	352	402	439
		PGD									512	561	653	749

*On request.

H316				H317				H318					iN	Code
960	1150	1450	1740	960	1150	1450	1740	960	1150	1450	1740			
				278	220	*	*					PGA	14	C14
				463	407	479	435					PGB		
				874	883	949	986					PGC		
				1223	1231	1402	1423					PGD		
271	201	176	*	276	218	*	*	271	170	*	*	PGA	16	C16
462	376	439	389	459	396	471	433	486	348	419	308	PGB		
821	827	929	999	838	840	907	958	797	850	902	930	PGC		
1221	1163	1392	1457	1174	1185	1362	1372	1179	1165	1354	1360	PGD		
270	204	178	*	273	215	*	*	274	179	*	*	PGA	18	C18
459	381	443	401	456	390	460	426	481	354	426	335	PGB		
793	791	902	972	797	802	886	930	776	819	880	909	PGC		
1189	1140	1365	1426	1123	1136	1306	1310	1136	1126	1314	1331	PGD		
269	208	181	*	271	207	*	*	275	188	*	*	PGA	20	C20
456	385	455	412	450	387	458	420	470	362	432	362	PGB		
767	778	877	942	757	762	855	887	766	786	860	890	PGC		
1148	1119	1325	1402	1058	1063	1250	1263	1106	1085	1296	1315	PGD		
268	210	183	*	270	206	180	*	280	197	*	*	PGA	22.4	C22
451	390	461	429	440	382	450	416	460	377	440	390	PGB		
746	756	864	914	722	721	828	861	748	752	847	870	PGC		
1096	1098	1296	1385	1029	1023	1228	1290	1077	1040	1257	1296	PGD		
265	212	193	*	263	203	180	*	276	207	*	*	PGA	25	C25
443	399	470	448	427	375	442	411	451	386	455	414	PGB		
730	737	847	888	681	682	783	816	725	720	828	858	PGC		
1055	1066	1277	1356	972	970	1164	1226	1033	1021	1227	1285	PGD		
264	221	207	*	265	215	198	*	274	217	196	*	PGA	28	C28
434	404	475	466	425	387	455	439	441	394	464	439	PGB		
688	700	806	851	655	662	762	801	683	687	790	826	PGC		
999	1024	1224	1312	942	956	1145	1219	981	987	1182	1252	PGD		
265	230	222	178	263	223	212	*	276	230	216	*	PGA	31.5	C32
432	415	487	490	418	394	463	459	440	408	480	470	PGB		
663	682	785	834	628	642	739	782	661	672	774	816	PGC		
969	1008	1202	1300	906	935	1116	1200	952	975	1165	1248	PGD		
264	237	235	201	255	226	221	184	274	239	232	187	PGA	35.5	C36
425	420	493	507	401	391	459	467	433	417	489	493	PGB		
634	658	758	812	580	599	690	736	631	650	748	796	PGC		
934	984	1171	1278	844	884	1052	1144	916	954	1137	1231	PGD		
253	231	232	205	247	223	221	190	264	235	231	194	PGA	40	C40
406	406	476	495	387	383	449	462	412	404	474	484	PGB		
587	612	706	758	548	570	656	702	584	605	697	744	PGC		
867	921	1094	1199	799	843	1003	1095	853	895	1066	1160	PGD		
245	226	227	204	246	224	224	196	254	229	227	194	PGA	45	C45
390	393	460	481	383	382	448	464	397	392	460	473	PGB		
554	579	668	718	536	558	643	690	551	572	658	706	PGC		
817	871	1034	1135	782	828	985	1077	804	848	1009	1101	PGD		
149	239	246	234	248	236	242	228	259	245	250	233	PGA	50	C50
393	410	479	512	381	394	462	491	399	410	480	508	PGB		
542	574	662	718	524	553	638	691	537	566	652	705	PGC		
805	872	1033	1146	771	832	987	1092	793	853	1012	1117	PGD		
250	245	256	252	240	234	243	237	258	250	260	252	PGA	56	C56
390	414	484	523	367	387	453	488	394	414	485	521	PGB		
535	570	658	718	491	522	602	656	528	560	646	703	PGC		
795	869	1028	1147	723	789	934	1040	777	846	1001	1114	PGD		
242	242	255	258	230	229	241	243	250	249	262	262	PGA	63	C63
375	405	473	517	349	375	439	479	378	406	474	517	PGB		
498	534	616	675	454	486	560	614	493	527	608	666	PGC		
746	824	973	1091	672	741	876	981	730	804	950	1064	PGD		
229	230	243	247	221	222	234	237	237	236	249	251	PGA	71	C71
353	382	447	490	334	361	422	462	357	385	450	492	PGB		
462	496	572	628	434	465	537	588	457	489	565	618	PGC		
690	764	902	1012	644	712	841	943	676	746	881	987	PGD		
222	224	237	242	213	214	227	230	228	228	241	244	PGA	80	C80
342	371	434	476	321	348	406	446	343	371	433	475	PGB		
444	477	550	605	410	440	508	557	437	469	541	594	PGC		
663	735	868	975	608	673	795	892	648	716	846	949	PGD		
215	217	234	236	201	203	215	219	219	220	233	237	PGA	90	C90
328	358	418	460	302	329	384	422	329	357	417	458	PGB		
419	450	521	572	379	407	470	516	413	444	512	562	PGC		
628	697	823	925	564	625	738	829	614	680	803	902	PGD		
203	207	221	229	192	194	205	210	208	212	226	233	PGA	100	D10
310	340	397	440	293	309	375	400	310	340	397	439	PGB		
387	418	483	532	360	378	443	481	382	412	476	524	PGC		
581	648	764	862	524	584	688	759	569	634	748	843	PGD		
192	197	211	218					197	202	215	228	PGA	112	D11
297	332	385	412					296	330	378	419	PGB		
378	402	454	492					367	380	452	490	PGC		
542	608	664	793					539	600	699	798	PGD		

*On request.

H4（kW）

Code	iN		H413				H414				H415			
			960	1150	1450	1740	960	1150	1450	1740	960	1150	1450	1740
C63	63	PGA												
C71	71	PGA	130	133	136	144	147	151	162	173	180	187	196	199
C80	80	PGA	127	130	134	141	143	148	158	169	174	180	191	193
C90	90	PGA	123	126	133	138	139	144	154	162	168	175	183	187
D10	100	PGA	120	121	130	134	136	141	149	158	161	160	172	174
D11	112	PGA	117	120	129	133	132	136	146	153	154	156	167	141
D13	125	PGA	114	117	126	131	128	132	142	147	149	152	163	168
D14	140	PGA	110	114	123	128	125	129	139	145	144	148	158	165
D16	160	PGA	104	108	116	122	121	126	135	142	138	143	153	160
D18	180	PGA	100	105	113	119	118	123	132	139	136	142	152	160
D20	200	PGA	98.2	103	110	116	111	117	126	133	132	139	149	157
D22	224	PGA	93.7	98.8	106	112	107	113	121	128	123	130	140	148
D25	250	PGA	89.1	94	100	106	104	110	118	125	117	123	132	140
D28	280	PGA	86.3	91.1	97.7	103	99.1	104	112	118	113	120	128	136
D32	315	PGA	82.8	87.3	93.7	99.1	95.5	100	108	114	108	114	122	129
D36	355	PGA	78.9	83.3	89.4	94.6	91.9	96.9	104	110	106	112	120	127
D40	400	PGA	75.6	80.9	86	90.1	88.3	93.2	100	105	103	104	116	123
D45	450	PGA	72.9	78.8	82.3	88.2	84.2	88.8	95.3	100	97.7	102	111	117

Code	iN		H416				H417				H418			
			960	1150	1450	1740	960	1150	1450	1740	960	1150	1450	1740
C63	63	PGA					206	210	215	218				
C71	71	PGA	193	200	210	215	199	203	210	213	211	214	225	228
C80	80	PGA	187	193	204	206	193	195	202	205	206	210	221	223
C90	90	PGA	180	187	196	203	185	190	195	197	199	204	213	215
D10	100	PGA	171	175	186	192	180	178	190	191	191	193	205	209
D11	112	PGA	166	167	179	183	173	173	186	189	185	185	198	201
D13	125	PGA	160	162	174	179	167	169	181	186	177	179	192	197
D14	140	PGA	153	158	169	175	161	164	176	183	171	175	188	194
D16	160	PGA	148	153	164	171	154	159	171	178	165	170	182	190
D18	180	PGA	142	148	159	167	151	157	169	177	158	165	177	185
D20	200	PGA	139	146	157	165	146	153	164	173	156	163	175	184
D22	224	PGA	136	144	154	163	136	144	154	163	151	159	170	180
D25	250	PGA	126	133	143	151	130	137	147	155	141	148	159	168
D28	280	PGA	120	126	135	143	126	133	143	151	133	141	151	160
D32	315	PGA	116	122	131	139	121	127	136	144	130	137	147	155
D36	355	PGA	111	118	126	134	118	124	133	141	124	131	141	149
D40	400	PGA	109	115	123	130	115	120	129	136	121	128	138	146
D45	450	PGA	102	109	116	123					116	125	130	139

B2 (kW)

Code	iN		B213				B214				B215			
			960	1150	1450	1740	960	1150	1450	1740	960	1150	1450	1740
B63	6.3	PGA	*	*	*	*	*	*	*	*	*	*	*	*
		PGB	906	996	1036	1028	1129	1241	1290	1274	1302	1422	1478	1406
		PGC	1132	1245	1295	1285	1411	1551	1613	1592	1627	1778	1847	1758
		PGD	1574	1740	1839	1894	1954	2150	2267	2322	2168	2311	2393	2342
B71	7.1	PGA	128	*	*	*	150	*	*	*	*	*	*	*
		PGB	637	683	676	616	768	817	804	721	756	762	720	563
		PGC	878	969	1009	1020	1082	1193	1242	1251	1206	1324	1378	1350
		PGD	1541	1733	1848	1946	1895	2124	2261	2371	2028	2218	2331	2367
B80	8	PGA	131	*	*	*	154	*	*	*	*	*	*	*
		PGB	588	643	646	616	705	767	768	723	705	735	713	609
		PGC	782	865	901	922	948	1047	1091	1113	1085	1194	1242	1239
		PGD	1375	1562	1674	1785	1663	1884	2016	2143	1830	2032	2152	2230
B90	9	PGA	135	111	*	*	164	*	*	*	144	*	*	*
		PGB	565	630	640	630	699	775	785	766	684	732	724	658
		PGC	731	810	844	872	922	1020	1063	1095	1026	1132	1179	1191
		PGD	1296	1484	1598	1721	1625	1875	1996	2144	1741	1956	2085	2195
C10	10	PGA	133	114	*	*	160	133	*	*	146	*	*	*
		PGB	535	601	616	617	642	719	734	729	643	698	698	655
		PGC	677	750	782	812	814	903	941	975	936	1034	1078	1098
		PGD	1200	1391	1490	1614	1444	1658	1787	1932	1596	1806	1933	2052
C11	11.2	PGA	123	108	*	*	157	136	*	*	138	*	*	*
		PGB	476	539	555	562	613	691	709	713		637	641	614
		PGC	587	651	679	708	762	845	881	916	465	911	949	972
		PGD	1046	1208	1306	1420	1356	1563	1688	1831	1030	1605	1722	1839
C13	12.5	PGA	122	106	*	*	156	139	*	*	1199	*	*	*
		PGB	425	473	517	523	579	659	681	697	523	578	584	560
		PGC	597	588	637	657	706	783	817	854	736	878	882	868
		PGD	958	1125	1211	1329	1255	1454	1574	1718	1328	1524	1805	1639
C14	14	PGA	118	103	*	*	143	131	*	*	126	*	*	*
		PGB	391	429	472	484	514	589	611	633	481	502	516	491
		PGC	506	526	546	583	610	678	707	743	652	790	803	730
		PGD	863	1034	1108	1233	1092	1270	1377	1509	1217	1406	1623	1428

*On request

B216				B217				B218					iN	Code
960	1150	1450	1740	960	1150	1450	1740	960	1150	1450	1740			
*	*	*	*	*	*	*	*					PGA	6.3	B63
1426	1555	1615	1522	1527	1661	1724	1598					PGB		
1782	1944	2019	1902	1909	2076	2155	1997					PGC		
2366	2499	2574	2482	2530	2633	2689	2533					PGD		
*	*	*	*	*	*	*	*	*	*	*	*	PGA	7.1	B71
815	809	754	560	838	811	740	503	897	849	760	473	PGB		
1316	1442	1500	1458	1430	1563	1625	1561	1535	1677	1742	1656	PGC		
2204	2394	2505	2519	2386	2563	2666	2639	2558	2723	2817	2751	PGD		
*	*	*	*	*	*	*	*	*	*	*	*	PGA	8	B80
784	807	775	641	793	800	756	592	874	868	808	600	PGB		
1225	1346	1401	1387	1297	1424	1481	1452	1434	1572	1634	1589	PGC		
2059	2273	2400	2467	2174	2378	2499	2539	2402	2608	2729	2743	PGD		
150	*	*	*	*	*	*	*	*	*	*	*	PGA	9	B90
730	773	759	674	774	807	782	669	823	847	812	671	PGB		
1094	1206	1256	1262	1234	1358	1413	1409	1299	1429	1486	1471	PGC		
1853	2073	2204	2306	2078	2308	2444	2533	2188	2414	2549	2619	PGD		
155	*	*	*	149	*	*	*	*	*	*	*	PGA	10	C10
704	759	753	694	737	783	770	688	799	839	818	712	PGB		
1037	1145	1192	1209	1145	1262	1314	1322	1237	1362	1418	1418	PGC		
1760	1984	2118	2237	1935	2167	2306	2416	2085	2322	2464	2564	PGD		
154	*	*	*	144	*	*	*	159	*	*	*	PGA	11.2	C11
662	720	721	679	669	720	714	656	760	809	797	715	PGB		
946	1045	1088	1110	1014	1119	1166	1181	1151	1270	1322	1331	PGC		
1616	1831	1960	2083	1720	1938	2068	2183	1940	2175	2315	2428	PGD		
149	*	*	*	140	*	*	*	158	*	*	*	PGA	12.5	C13
598	661	669	650	637	658	685	621	691	750	749	701	PGB		
831	920	958	986	905	966	1062	1078	1021	1127	1174	1195	PGC		
1430	1632	1754	1882	1623	1768	1809	1865	1730	1957	2093	2221	PGD		
139	*	*	*	136	*	*	*	157	*	*	*	PGA	14	C14
519	623	637	603	601	614	634	594	653	694	715	685	PGB		
781	838	882	903	847	935	967	1012	886	1043	1061	1054	PGC		
1327	1465	1632	1704	1504	1632	1777	1783	1625	1768	1876	2056	PGD		

*On request

B3 (kW)

Code	iN		B313				B314				B315			
			960	1150	1450	1740	960	1150	1450	1740	960	1150	1450	1740
C16	16	PGA	165	151	122	*	191	174	138	*	221	185	*	*
		PGB	388	426	445	450	448	492	511	513	553	597	597	568
		PGC	523	582	615	646	592	659	694	727	834	929	957	981
		PGD	846	958	1047	1128	959	1085	1181	1268	1322	1486	1583	1662
C18	18	PGA	167	155	128	*	195	180	146	*	216	185	*	*
		PGB	392	432	454	462	452	498	520	527	531	575	581	560
		PGC	526	586	622	655	596	663	702	737	801	892	924	952
		PGD	853	967	1060	1146	965	1093	1195	1289	1265	1424	1525	1610
C20	20	PGA	159	149	126	*	180	168	140	*	212	185	*	*
		PGB	367	406	428	440	413	456	480	489	513	557	568	555
		PGC	492	548	583	617	542	603	640	675	769	856	891	923
		PGD	798	905	996	1081	877	995	1092	1182	1215	1370	1475	1566
C22	22.4	PGA	154	147	126	*	185	174	148	*	210	187	*	*
		PGB	349	387	412	426	417	462	489	503	498	544	559	554
		PGC	459	511	546	580	546	609	649	686	728	810	849	883
		PGD	746	847	936	1019	885	1005	1107	1203	1155	1304	1412	1507
C25	25	PGA	149	144	128	102	176	170	150	116	204	189	153	*
		PGB	329	367	395	414	390	435	466	486	466	513	537	544
		PGC	422	470	506	540	510	568	610	650	658	733	776	816
		PGD	687	783	870	954	827	941	1045	1143	1047	1186	1297	1399
C28	28	PGA	144	143	131	112	172	170	155	130	205	195	168	*
		PGB	312	350	380	404	373	417	452	479	453	503	535	554
		PGC	391	436	472	508	474	528	572	614	631	703	751	798
		PGD	640	731	819	903	772	881	985	1085	1007	1145	1265	1378
C32	31.5	PGA	139	140	131	116	165	165	154	135	196	191	170	137
		PGB	296	333	365	391	350	393	430	460	423	473	508	534
		PGC	362	404	440	475	434	484	526	568	572	637	686	733
		PGD	595	680	766	849	710	811	912	1009	917	1044	1162	1274
C36	35.5	PGA	135	137	130	119	159	160	151	137	192	189	173	146
		PGB	284	321	353	381	332	375	412	443	407	457	495	525
		PGC	345	384	427	454	405	451	492	533	544	606	655	704
		PGD	566	648	732	814	662	758	855	949	873	996	1114	1228
C40	40	PGA	128	130	125	116	152	155	147	136	183	182	168	146
		PGB	267	302	334	362	315	355	392	424	383	430	469	500
		PGC	318	354	387	421	377	420	459	498	502	558	606	653
		PGD	523	599	678	755	617	706	798	888	808	923	1035	1144
C45	45	PGA	119	122	117	110	147	150	144	134	171	171	160	142
		PGB	244	279	306	333	301	341	377	409	352	397	434	465
		PGC	285	317	348	378	357	397	435	474	451	502	547	591
		PGD	467	535	607	677	586	671	760	847	728	832	936	1037
C50	50	PGA	122	126	124	120	141	146	142	138	178	182	174	163
		PGB	244	278	310	340	283	321	358	392	356	402	445	483
		PGC	282	314	346	378	330	367	405	442	454	505	554	602
		PGD	466	535	610	684	543	623	709	794	728	834	944	1053
C56	56	PGA	113	118	117	116	131	136	135	133	165	171	167	161
		PGB	223	254	285	314	258	294	330	363	325	369	411	450
		PGC	252	281	311	341	293	326	361	395	406	452	498	544
		PGD	416	478	547	614	486	558	637	716	652	748	852	954
C63	63	PGA	109	114	114	114	133	139	138	137	159	165	162	158
		PGB	214	244	275	303	259	296	332	367	309	352	393	431
		PGC	237	264	293	321	292	326	361	395	380	423	468	511
		PGD	393	452	517	582	481	553	633	712	612	703	802	899
C71	71	PGA	103	108	107	107	122	128	127	127	151	158	155	153
		PGB	201	229	258	285	236	269	302	334	292	333	372	409
		PGC	214	238	265	290	262	291	323	354	350	390	430	471
		PGD	356	410	469	528	431	495	567	638	567	651	743	834
C80	80	PGA	98	102	103	103	117	123	123	123	145	149	150	146
		PGB	217	233	243	261	227	259	291	323	282	312	351	376
		PGC	221	230	253	258	246	274	303	334	318	361	462	434
		PGD	321	380	427	462	407	468	536	604	516	603	657	773
C90	90	PGA	92	98	98	97	110	115	115	116	139	143	145	140
		PGB	206	214	219	241	212	242	273	302	271	296	330	352
		PGC	211	221	240	246	222	247	274	302	277	334	421	406
		PGD	307	356	386	412	369	425	487	549	463	554	601	724

* On request

B316				B317				B318					iN	Code
960	1150	1450	1740	960	1150	1450	1740	960	1150	1450	1740			
227	186	*	*	241	189	*	*	245	*	*	*	PGA	16	C16
579	621	615	575	713	758	737	671	732	774	741	658	PGB		
863	961	984	1002	1012	1126	1143	1152	1034	1150	1158	1157	PGC		
1366	1532	1621	1691	1654	1849	1937	2000	1682	1876	1949	1994	PGD		
230	193	*	*	237	191	*	*	263	205	*	*	PGA	18	C18
573	617	617	586	686	734	722	669	763	811	787	714	PGB		
850	946	97	998	968	1078	1100	1116	1066	1186	1202	1210	PGC		
1344	1510	1608	1687	1584	1775	1872	1946	1738	1942	2033	2096	PGD		
223	191	*	*	234	194	*	*	246	198	*	*	PGA	20	C20
548	593	599	577	662	711	708	668	700	749	736	681	PGB		
808	899	932	959	931	1037	1066	1088	971	1082	1103	1119	PGC		
1280	1440	1542	1628	1523	1710	1815	1900	1589	1780	1876	1949	PGD		
219	192	*	*	236	201	*	*	243	202	*	*	PGA	22.4	C22
528	574	586	573	646	698	702	673	675	725	722	681	PGB		
773	861	897	929	891	992	1026	1054	931	1037	1066	1088	PGC		
1227	1383	1490	1582	1461	1644	1756	1851	1525	1712	1818	1902	PGD		
222	202	160	*	234	208	*	*	250	219	*	*	PGA	25	C25
513	563	585	587	607	662	681	674	661	718	732	714	PGB		
735	818	862	902	810	902	945	983	893	994	1035	1071	PGC		
1168	1322	1440	1546	1333	1505	1629	1738	1467	1654	1780	1890	PGD		
216	204	172	*	239	222	183	*	248	227	182	*	PGA	28	C28
480	531	562	577	596	656	689	700	621	682	711	716	PGB		
666	741	790	835	784	873	926	974	812	904	954	1001	PGC		
1060	1204	1326	1440	1292	1465	1605	1734	1336	1513	1650	1776	PGD		
215	208	183	142	232	221	190	*	250	236	199	*	PGA	31.5	C32
468	521	558	582	557	619	658	681	608	673	712	731	PGB		
638	710	762	812	717	798	854	906	786	874	932	986	PGC		
1020	1161	1288	1409	1184	1345	1487	1619	1296	1471	1620	1759	PGD		
205	201	181	149	228	221	196	155	241	232	203	155	PGA	35.5	C36
435	487	526	555	538	599	644	674	569	633	677	705	PGB		
580	646	697	746	682	759	817	873	718	799	857	913	PGC		
929	1059	1181	1299	1129	1286	1429	1566	1188	1351	1498	1636	PGD		
199	197	180	153	220	215	194	160	236	230	204	164	PGA	40	C40
419	470	510	541	508	568	614	647	548	611	657	690	PGB		
550	612	663	713	634	706	523	818	682	759	818	874	PGC		
884	1009	1129	1245	1053	1200	1339	1472	1132	1289	1434	1572	PGD		
190	189	176	154	206	204	187	159	228	224	203	169	PGA	45	C45
395	444	484	517	470	526	572	607	520	581	629	665	PGB		
507	565	614	662	575	641	694	746	638	710	768	823	PGC		
818	934	1049	1160	955	1090	1221	1346	1057	1205	1346	1481	PGD		
178	182	174	161	219	221	210	191	216	218	204	184	PGA	50	C50
636	411	453	491	478	539	593	640	481	542	594	639	PGB		
457	509	557	604	582	647	707	766	580	646	704	761	PGC		
738	845	956	1064	962	1101	1242	1380	963	1101	1240	1376	PGD		
186	191	186	179	205	210	203	193	228	233	225	211	PGA	56	C56
365	415	461	504	438	497	552	601	488	553	612	665	PGB		
458	510	562	613	523	582	640	697	583	649	713	775	PGC		
738	846	962	1076	867	994	1128	1260	966	1107	1255	1401	PGD		
171	177	173	168	198	204	199	192	211	217	211	202	PGA	63	C63
333	378	422	463	419	475	529	579	447	507	563	615	PGB		
408	454	502	548	492	548	604	659	526	585	644	702	PGC		
659	757	862	966	820	941	1071	1198	869	997	1133	1267	PGD		
164	170	167	163	187	194	190	184	204	210	205	198	PGA	71	C71
318	362	404	444	393	446	498	546	426	484	539	590	PGB		
385	428	465	518	455	506	558	610	496	552	608	664	PGC		
621	713	813	912	757	869	990	1109	824	945	1075	1204	PGD		
157	163	161	158	178	184	185	173	193	200	196	190	PGA	80	C80
301	343	384	423	374	416	468	524	400	454	507	556	PGB		
354	394	435	476	413	468	514	573	456	507	560	612	PGC		
573	658	751	843	695	794	875	1040	761	873	994	1114	PGD		
144	157	160	153					184	190	189	182	PGA	90	C90
289	332	364	402					383	414	476	502	PGB		
309	349	402	436	0	0	0	0	424	480	499	581	PGC		
533	612	695	783					721	819	873	1027	PGD		

*On request

B4（kW）

Code	iN		B413				B414				B415			
			960	1150	1450	1740	960	1150	1450	1740	960	1150	1450	1740
C90	90	PGA												
D10	100	PGA	112	117	121	123	130	135	140	142	146	150	156	155
D11	112	PGA	107	112	116	118	126	132	137	139	139	144	149	150
D13	125	PGA	102	108	112	114	119	125	130	133	132	138	143	144
D14	140	PGA	97.6	103	107	109	114	120	125	128	128	134	139	141
D16	160	PGA	92.4	97.8	101	104	110	116	121	124	121	127	132	135
D18	180	PGA	87.2	92.8	96.5	99.8	103	110	114	118	114	120	125	129
D20	200	PGA	85.2	91	94.7	98.3	98. 5	105	109	113	112	119	124	128
D22	224	PGA	79.9	85.6	89.1	92.9	93. 2	99. 8	104	108	105	112	117	121
D25	250	PGA	77.3	83.1	86.6	90.6	90. 6	97. 4	101	106	102	109	114	119
D28	280	PGA	73	78.8	82.1	86.3	85. 2	92	95. 9	100	95	102	106	112
D32	315	PGA	69.6	75.2	78.4	82.3	82. 4	89	92. 7	97. 4	89. 7	96. 9	100	106
D36	355	PGA	67	68.2	76.2	79.3	77. 8	84	87. 6	92	82.3	92.6	95	103
D40	400	PGA	63.2	65.1	72.8	76.5	74. 1	80	83. 4	87. 6	79.6	89.1	92	99

B416				B417				B418					iN	Code
960	1150	1450	1740	960	1150	1450	1740	960	1150	1450	1740			
				175	176	178	183					PGA	90	C90
160	163	169	168	164	167	170	173	180	182	188	185	PGA	100	D10
151	155	161	161	157	161	165	167	169	173	179	177	PGA	112	D11
144	149	155	155	149	154	160	159	161	166	172	171	PGA	125	D13
137	143	148	150	144	149	156	155	154	159	165	166	PGA	140	D14
132	138	143	146	136	142	150	147	148	155	160	162	PGA	160	D16
124	131	136	140	128	135	143	140	139	146	152	155	PGA	180	D18
117	125	130	134	126	134	143	139	132	140	146	150	PGA	200	D20
116	123	128	133	117	125	135	130	130	138	144	149	PGA	224	D22
108	116	120	126	114	122	133	127	122	131	136	142	PGA	250	D25
104	113	117	123	107	115	126	120	117	127	132	139	PGA	280	D28
98.5	106	110	116	101	109	119	113	110	119	124	131	PGA	315	D32
92.4	99.7	103	109	97	102	113	108	104	113	117	123	PGA	355	D36
88	95.2	99	105					108	110	113	117	PGA	400	D40

9 Permissible additional radial force on output shaft

9.1 Permissible additional radial force on output shaft d:

Permissible additional radial force FR2 (kN) , applied at midpaint of extension of output shaft*.

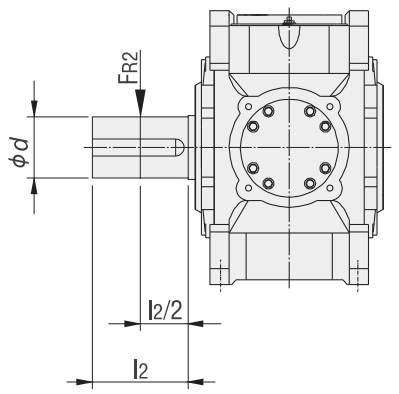

Type	Arrangement	13	14	15	16	17	18
H2..HS	A+B+G+H	150	150	160	205	205	205
	C+D	112	112	120	135	135	135
H3..HS	A+B+G+H	190	190	200	265	265	265
	C+D	150	150	160	185	185	190
H4..HS	C+D	190	190	200	265	265	265
	A+B+G+H	150	150	160	185	185	190
B2..HS	A+C	160	160	170	210	210	210
	B+D	110	110	115	145	145	145
B3..HS	A+C	190	190	200	265	265	265
	B+D	150	150	160	185	185	190
B4..HS	A+C	190	190	200	265	265	265
	B+D	150	150	160	185	185	190

⚠ Note: 1. If the angle of applied force and the direction of rotation are given, higher additional force can mostly allowed.Please consult us.
2. *Permissible Additional Radial Forces FR2(kN) acting on the center of the output shaft. For application of force outside the center of the shaft end, see 9.2.
3. Lowest performance level of foundation bolt is 8.8. The foundation should be dry and grease free. If customers have requirements, radial force is allowed to be applied at input shaft d1. Please consult us.

9.2 Additional radial force allowed on output shaft d:

Force is not applied at midpoint of shaft extension of output shaft

$F_{RZ2} = F_{R2} \times k$

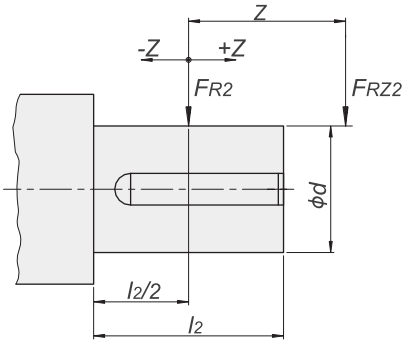

F_{RZ2} Permissible external radial force

F_{R2} Permissible additional radial force Determined according to table 9.1

k Apllied force factor should be determined according to the following table

Applied force factor k

Size	Distance z(mm)														
	-200	-150	-100	-75	-50	-25	0	25	50	75	100	150	200	250	300
13/14		1.24	1.15	1.11	1.07	1.03	1	0.92	0.86	0.8	0.75	0.67	0.6	0.55	0.5
15/16		1.2	1.12	1.09	1.06	1.03	1	0.93	0.87	0.82	0.77	0.69	0.63	0.58	0.53
17/18	1.25	1.17	1.11	1.08	1.05	1.03	1	0.94	0.88	0.84	0.79	0.72	0.66	0.6	0.56

⚠ Note: 1.FRZ2:Permissible external radial force when the application of forces outside the center of shaft end.
2.FR2:Permissible additional radial force according to the table on P23.
3.K:The factor for action force is in the tale below.

10 Shaft assemblies:

10.1 H series shaft assemblies:

10.1.1 Shaft assemblies:

Parallel key solid shaft

H...HS

H...VS

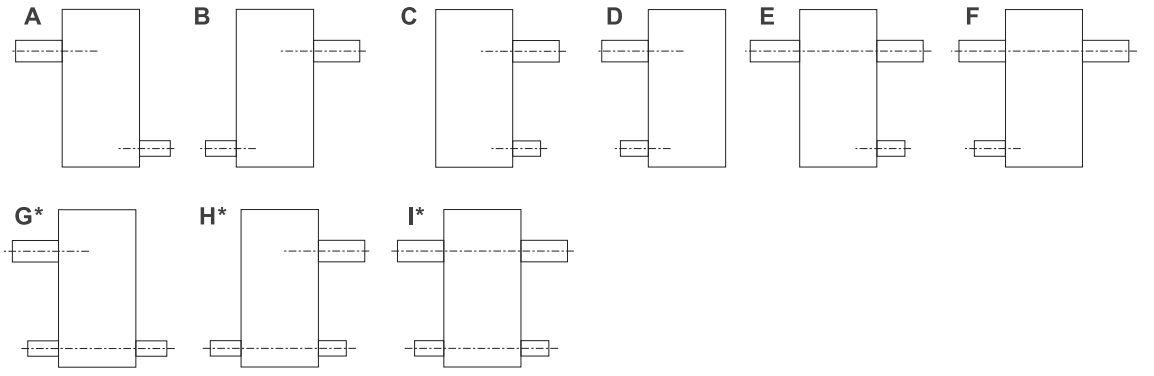

Parallel key hollow shaft

H...HH

H...VH

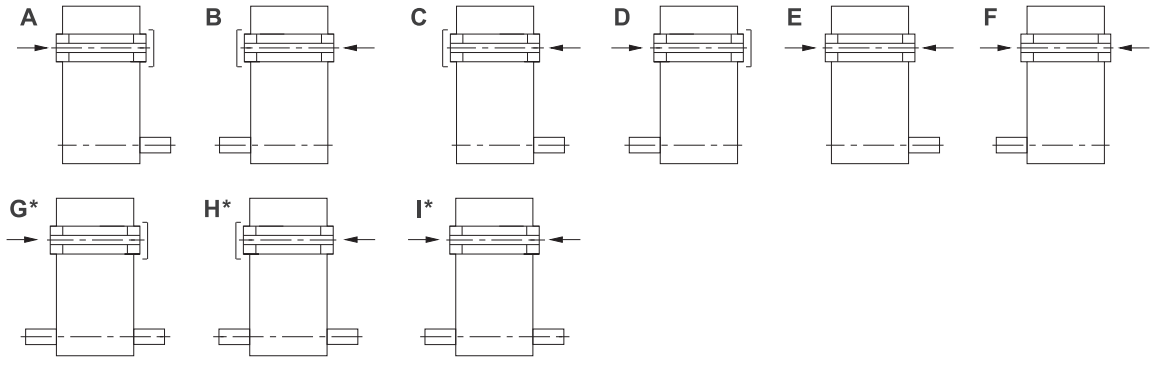

Hollow shaft with shrink disc

H...HD

H...VD

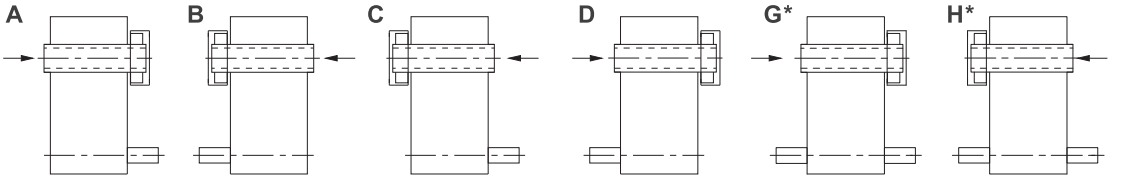

Hollow shaft with involute spline

H...HK

H...VK

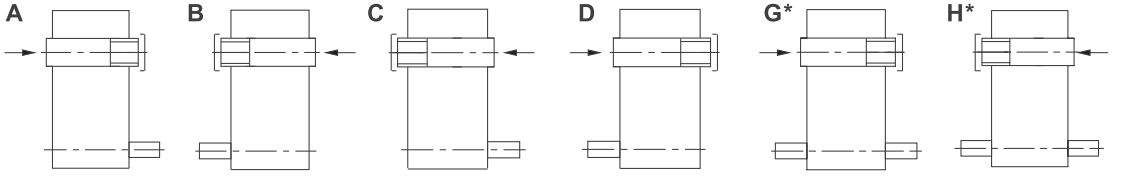

Size / iN / Type	13	14	15	16	17	18
H2	6.3-14	3.15-14	6.3-14	3.15-14	5.6-14	3.55-16
H3	16-63	16-63	16-63	16-63	14-56	16-63
H4	71-280	71-280	71-280	71-280	63-250	71-280

⚠ Note: *Shaft assemblies G/H/I is available when nominal ratio is within the range of value showed in right table.

10.1.2 Direction of rotation:

H2..H	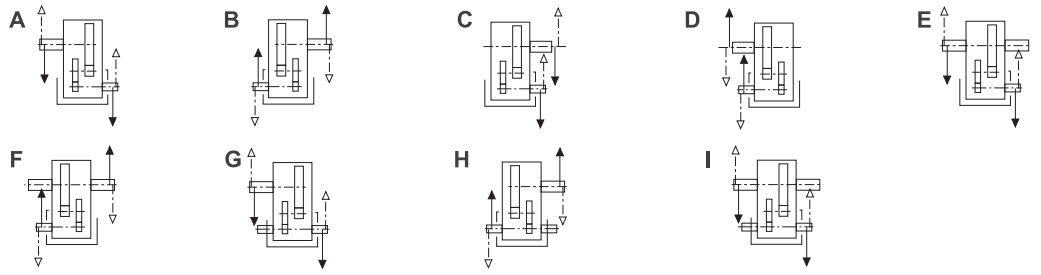
H2..V	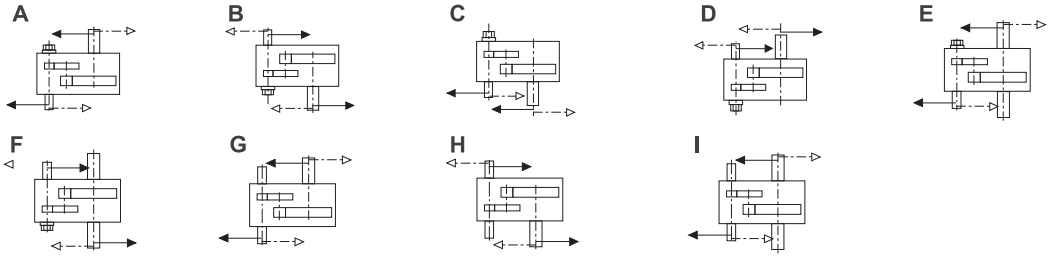
H3..H	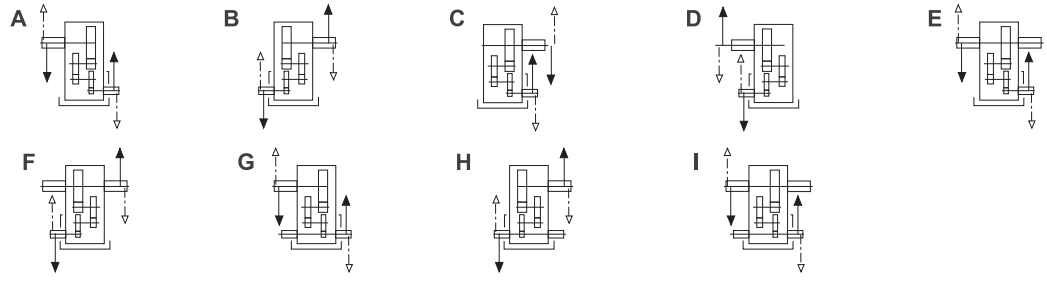
H3..V	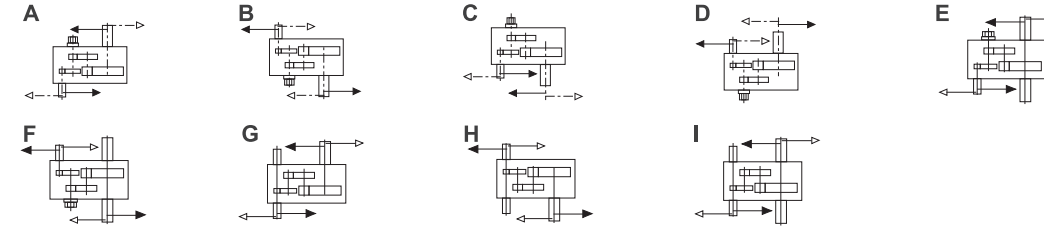
H4..H	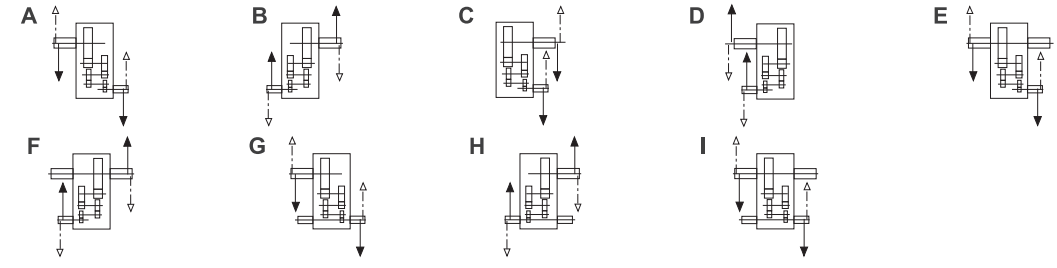
H4..V	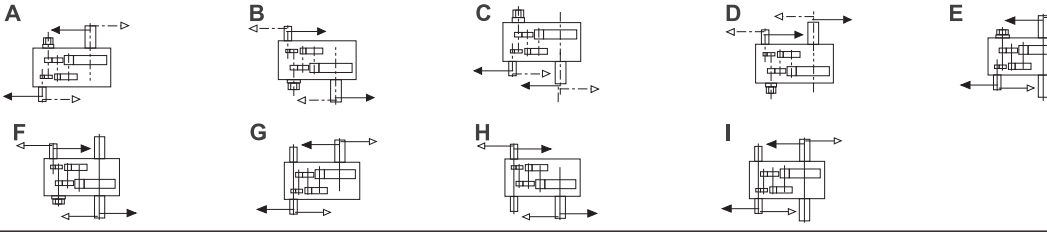

⚠Note:Direction of rofation is reversible," ⊞ " is shaft end oil pump.

10.2 B series shaft assemblies:

10.2.1 Shaft assemblies:

Parallel key solid shaft B...HS B...VS	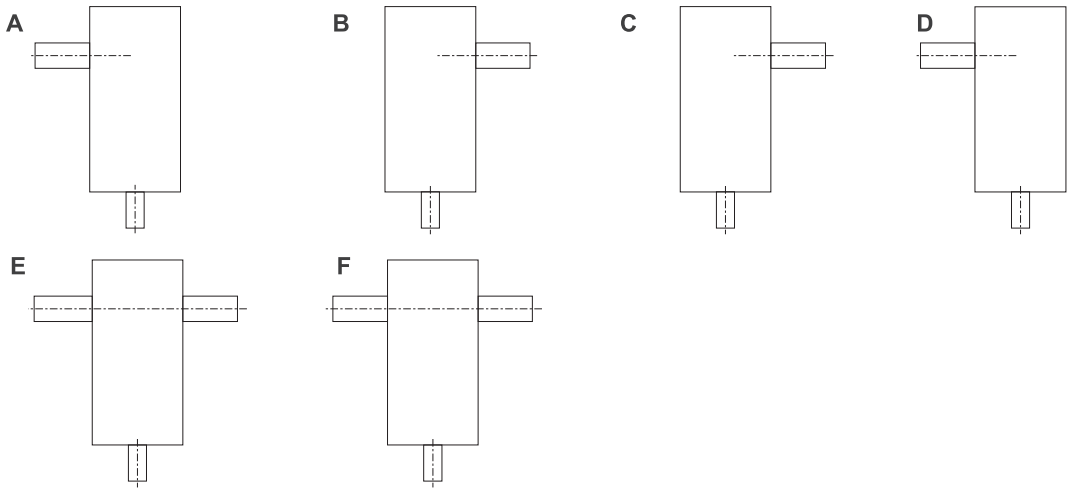
Parallel key hollow shaft B...HH B...VH	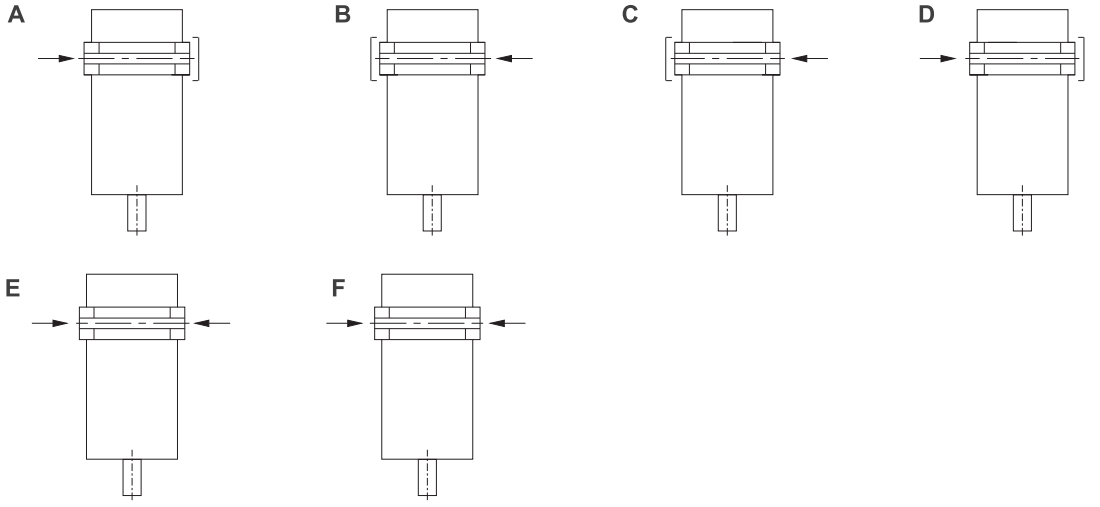
Hollow shaft with shrink disc B...HD B...VD	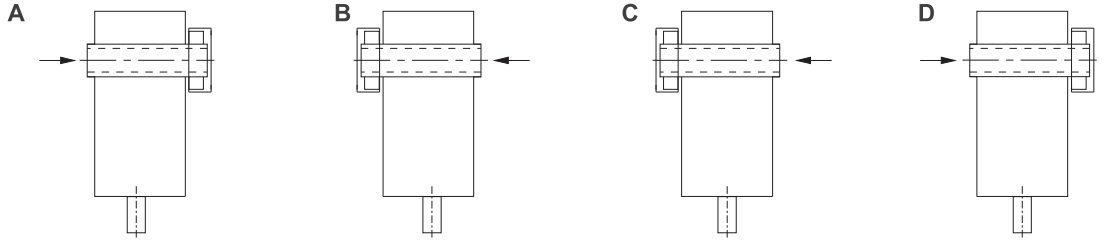
Hollow shaft with involute spline B...HK B...VK	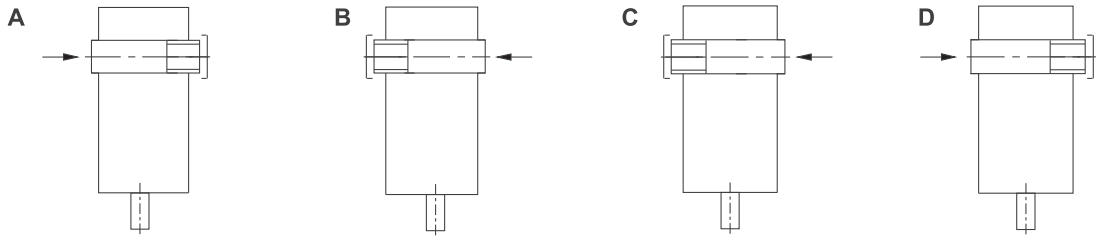

10.2.2 Direction of rotation:

B2. . H	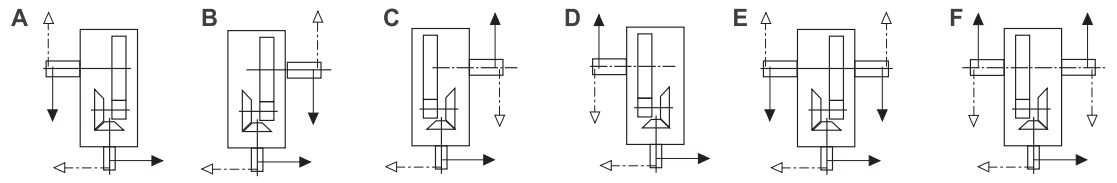
B2. . V	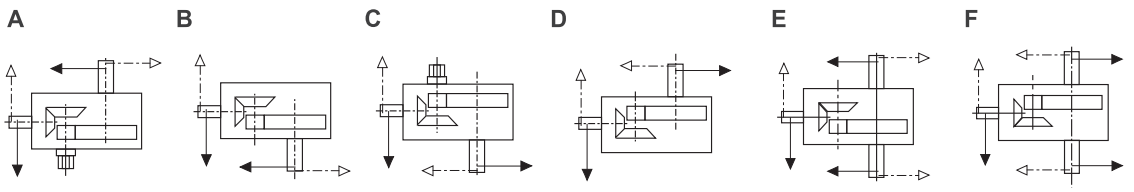
B3. . H	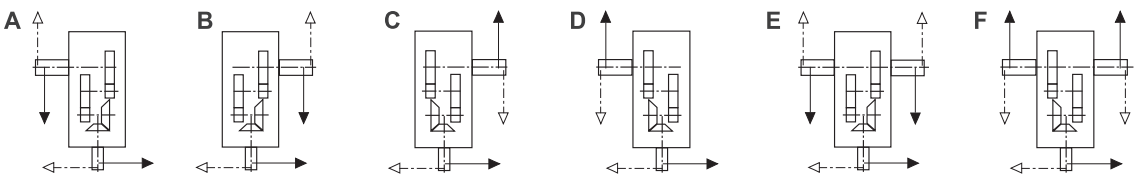
B3. . V	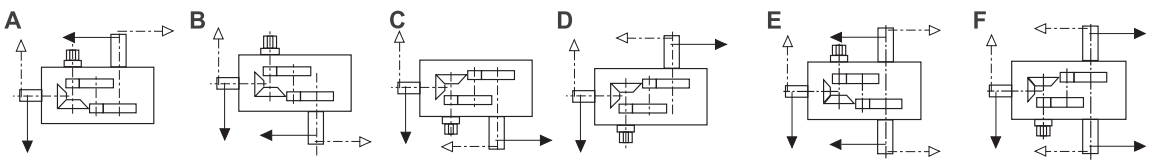
B4. . H	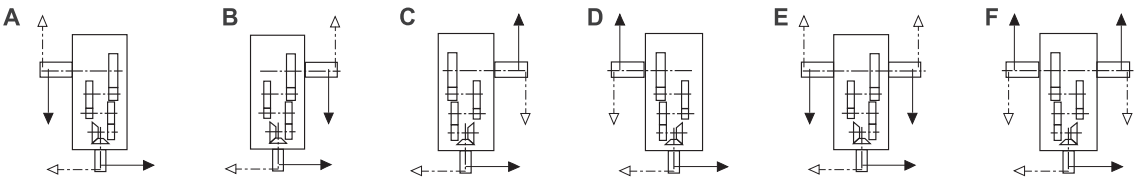
B4. . V	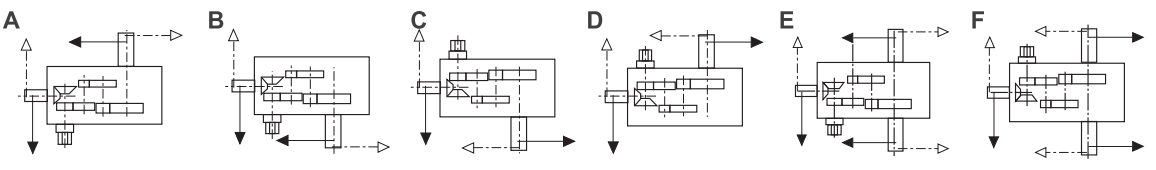

⚠ Note:1.Direction of rofation is reversible,"⊞ " is shaft end oil pump.
2.Two stage reduction B series gear unit is not equipped with backstop and shaft end oil pump when solid and hollow output shaft assemblies is B/D/E/F, please consult us if shaft end oil pump and backstop are needed.

10.3 Backstop assemblies and direction of shaft rotation direction:

H3...S H3...H H3...D H3...K	A 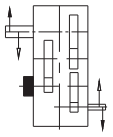	B 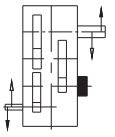	C 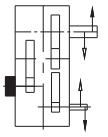	D 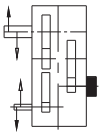	E 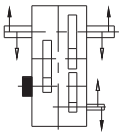	F 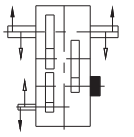
H4...S H4...H H4...D H4...K	A 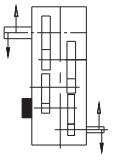	B 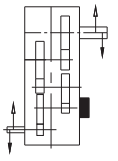	C 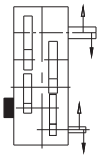	D 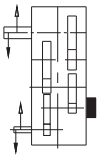	E 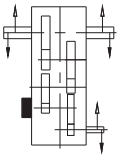	F 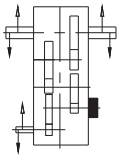
B2...S B2...H B2...D B2...K	A 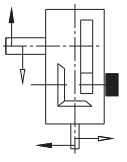		C 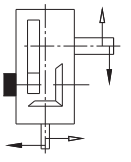			
B3...S B3...H B3...D B3...K	A 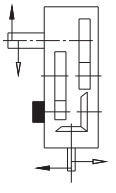	B 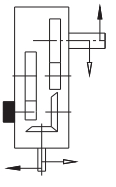	C 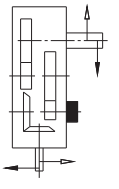	D 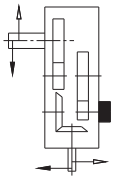	E 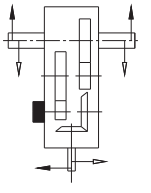	F 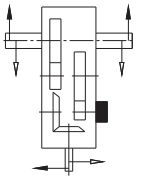
B4...S B4...H B4...D B4...K	A 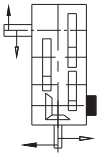	B 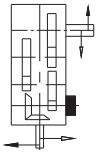	C 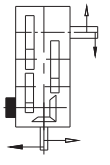	D 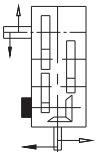	E 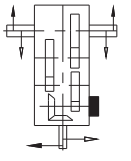	F 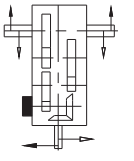

⚠Note:1.Gearbox with backstop only makes unidirectional rotation. Output shaft rotation direction has to be indicated when beingordered.
2.H2 series doesn't have backstop.
3.Shaft end oil pump can not be installed with backstop for all HB series, please consult us if both shaft end oil pump and backstop needed to be installed.

11 Outline dimension

H213H-H218H

H2

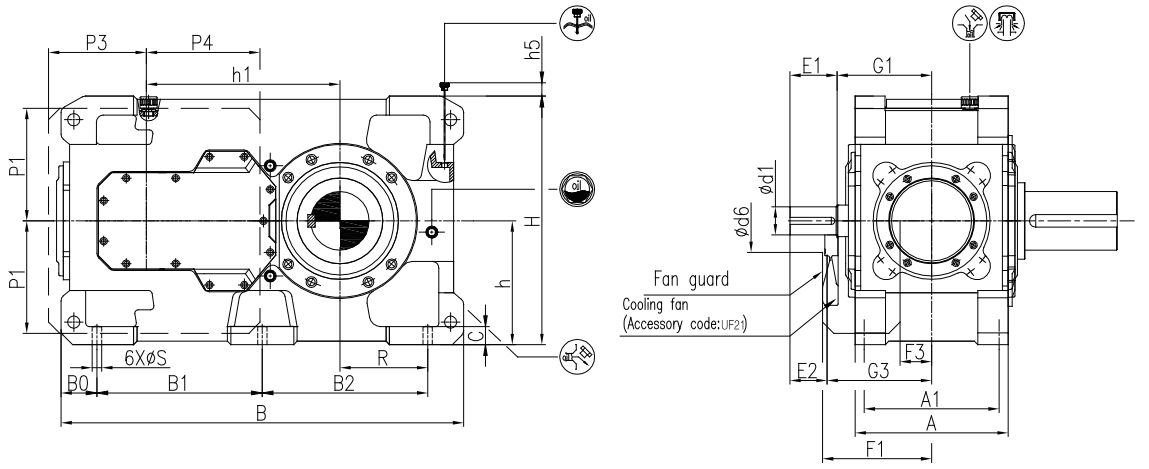

H2..HS
Parallel key solid shaft

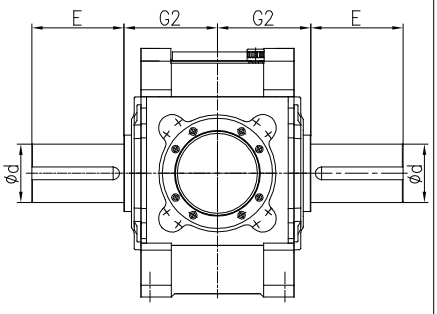

H2..HH
Parallel key hollow shaft

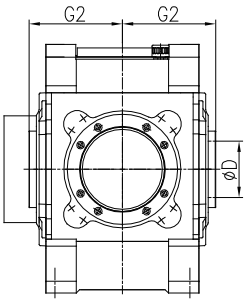

H2..HD
Hollow shaft with shrink disc

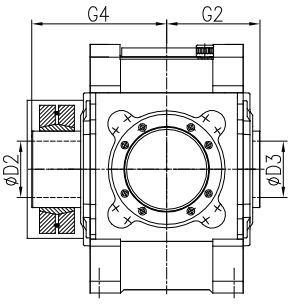

H2..HK
Hollow shaft with involute spline

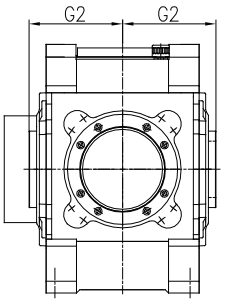

Size	iN=3.15 -11.2			iN=3.15 -12.5			iN=12.5 -20			iN=14 -20			A	A1	B	B0	B1	B2
	d1	E1	E2	d1	E1	E2	d1	E1	E2	d1	E1	E2						
13	100m6	210	175				85m6	170	135				545	475	1375	142	545	545
14	100m6	210	175				85m6	170	135				545	475	1505	137	545	685
15	120m6	210	175				100m6	210	175				620	535	1630	160	655	655
16	120m6	210	175				100m6	210	175				620	535	1720	160	655	745
17	125m6	210	165				110m6	210	165				680	600	1790	160	735	735
18				125m6	210	165				110m6	210	165	680	600	1910	160	735	855

Size	C	d	d6	D	D2	D3	E	F1	F3	G1	G2	G3	G4	H	h	h1	h5	P1	P3	P4	R	S	Weight (kg)
13	60	200m6	250	190H7	190H7	190H7	350	385	135	330	335	365	480	875	440	635	40	400	330	365	305	35	2075
14	60	220m6	250	210H7	210H7	210H7	350	385	135	330	335	365	480	940	440	705	40	400	330	365	375	35	2825
15	70	240m6	280	230H7	230H7	230H7	410	430	155	365	380	400	550	1000	500	762	40	450	370	440	365	42	3610
16	70	250m6	280	240H7	240H7	240H7	410	430	155	365	380	400	550	1035	500	808	40	450	370	440	410	42	3970
17	80	260n6	280	250H7	250H7	250H7	410	485	140	420	415	465	600	1105	550	860	60	500	435	505	390	42	4765
18	80	280n6	280	275H7	275H7	275H7	470	485	140	420	415	465	600	1110	550	920	60	500	435	505	450	42	5265

H313H-H318H

H3

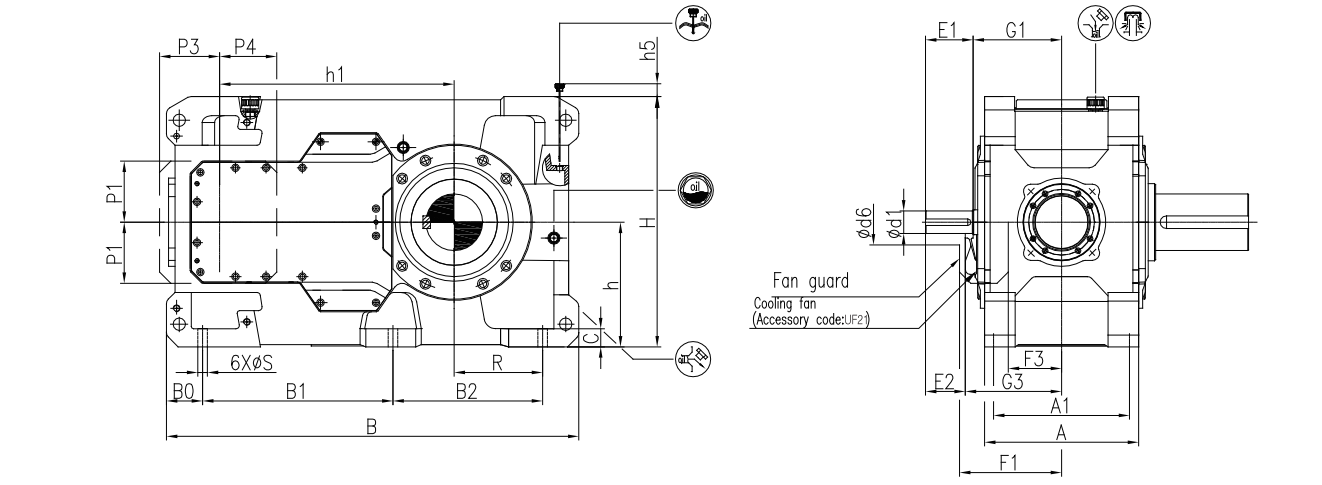

H3..HS
Parallel key solid shaft

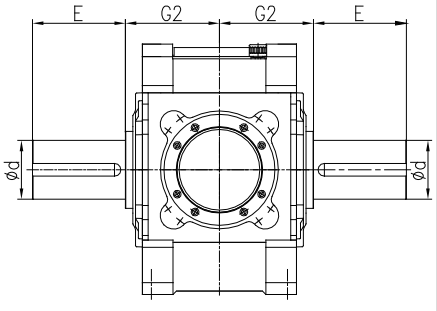

H3..HH
Parallel key hollow shaft

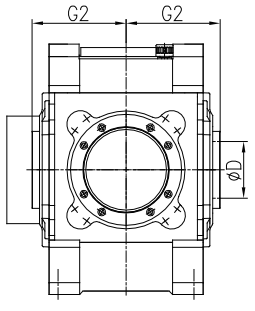

H3..HD
Hollow shaft with shrink disc

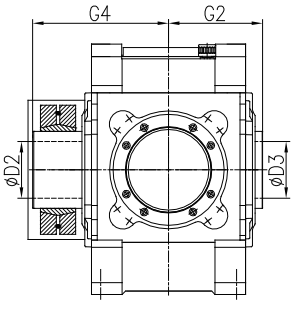

H3..HK
Hollow shaft with involute spline

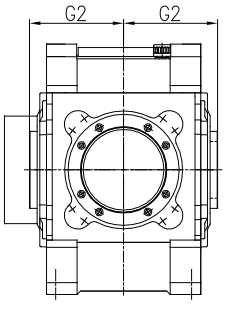

Size	iN=14-45			iN=16-50			iN=50-100			iN=56-100			iN=56-112			A	A1	B	B0	B1	B2	C
	d1	E1	E2	d1	E1	E2	d1	E1	E2	d1	E1	E2	d1	E1	E2							
13				85m6	170	130				60m6	140	100				545	475	1470	137	667.5	527.5	60
14				85m6	170	130				60m6	140	100				545	475	1610	137	667.5	667.5	60
15				100m6	210	165							75m6	140	95	620	535	1760	161	840	600	70
16				100m6	210	165							75m6	140	95	620	535	1850	160	840	690	70
17	100m6	210	165				75m6	140	95							680	600	1820	160	840	660	80
18				100m6	210	165							75m6	140	95	680	600	1940	160	840	780	80

Size	d	d6	D	D2	D3	E	F1	F3	G1	G2	G3	G4	H	h	h1	h5	P1	P3	P4	R	S	Weight (kg)
13	200m6	190	190H7	190H7	190H7	350	370	195	325	335	365	480	875	440	820	0	225	225	215	305	35	2355
14	220m6	190	210H7	210H7	210H7	350	370	195	325	335	365	480	940	440	890	40	225	225	215	375	35	2880
15	240m6	200	230H7	230H7	230H7	410	415	205	365	380	410	550	1000	500	987	60	270	265	252	365	42	3640
16	250m6	200	240H7	240H7	240H7	410	415	205	365	380	410	550	1035	500	1033	20	270	265	252	410	42	4195
17	260n6	200	250H7	250H7	250H7	410	450	235	400	415	445	600	1105	550	1035	60	270	265	252	390	42	4670
18	280n6	200	275H7	275H7	275H7	470	450	235	400	415	445	600	1110	550	1095	70	270	265	252	450	42	5165

H413H-H418H

H4

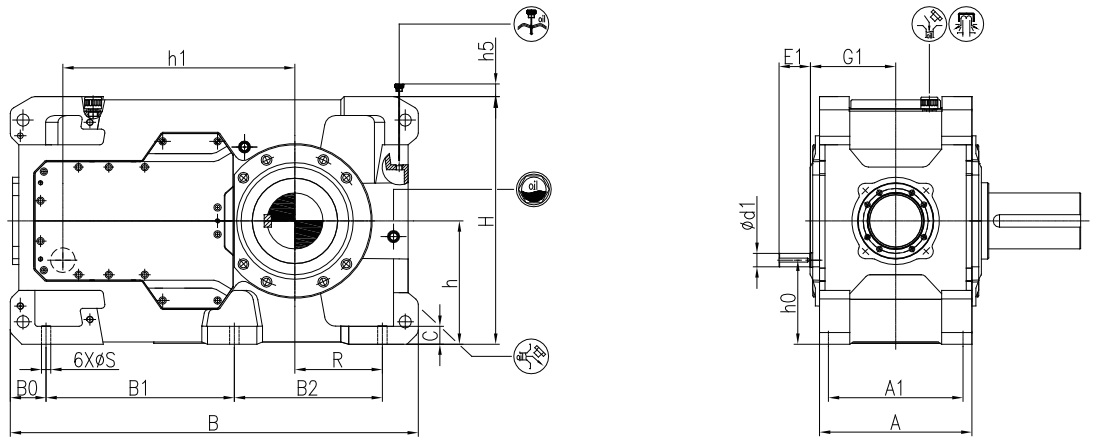

H4..HS
Parallel key solid shaft

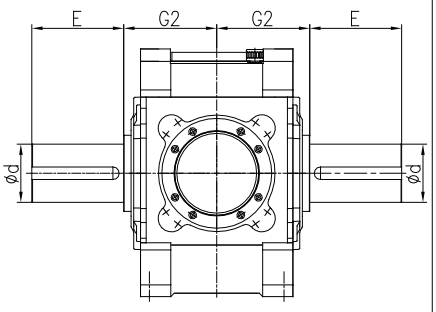

H4..HH
Parallel key hollow shaft

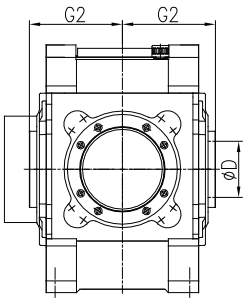

H4..HD
Hollow shaft with shrink disc

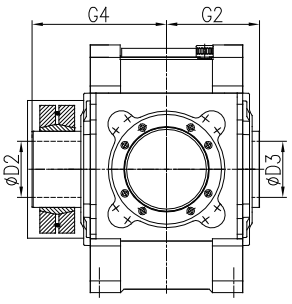

H4..HK
Hollow shaft with involute spline

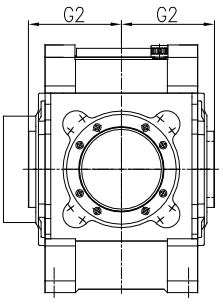

Size	iN=63-200		iN=71-224		iN=224-400		iN=250-450		A	A1	B	B0	B1	B2	C	d
	d1	E1	d1	E1	d1	E1	d1	E1								
13			50k6	110			38k6	80	545	475	1470	137	667.5	527.5	60	200m6
14			50k6	110			38k6	80	545	475	1610	137	667.5	667.5	60	220m6
15			60m6	140			50k6	110	620	535	1760	161	840	600	70	240m6
16			60m6	140			50k6	110	620	535	1850	160	840	690	70	250m6
17	60m6	140			50k6	110			680	600	1820	160	840	660	80	260n6
18			60m6	140			50k6	110	680	600	1940	160	840	780	80	280n6

Size	D	D2	D3	E	G1	G2	G4	H	h	h0	h1	h5	R	S	Weight(kg)
13	190H7	190H7	190H7	350	305	335	480	875	440	300	820	0	305	35	2450
14	210H7	210H7	210H7	350	305	335	480	940	440	300	890	40	375	35	2995
15	230H7	230H7	230H7	410	345	380	550	1000	500	325	987	60	365	42	3810
16	240H7	240H7	240H7	410	345	380	550	1035	500	325	1033	20	410	42	4290
17	250H7	250H7	250H7	410	380	415	600	1105	550	375	1035	60	390	42	4795
18	275H7	275H7	275H7	470	380	415	600	1110	550	375	1095	70	450	42	5325

B213H-B218H

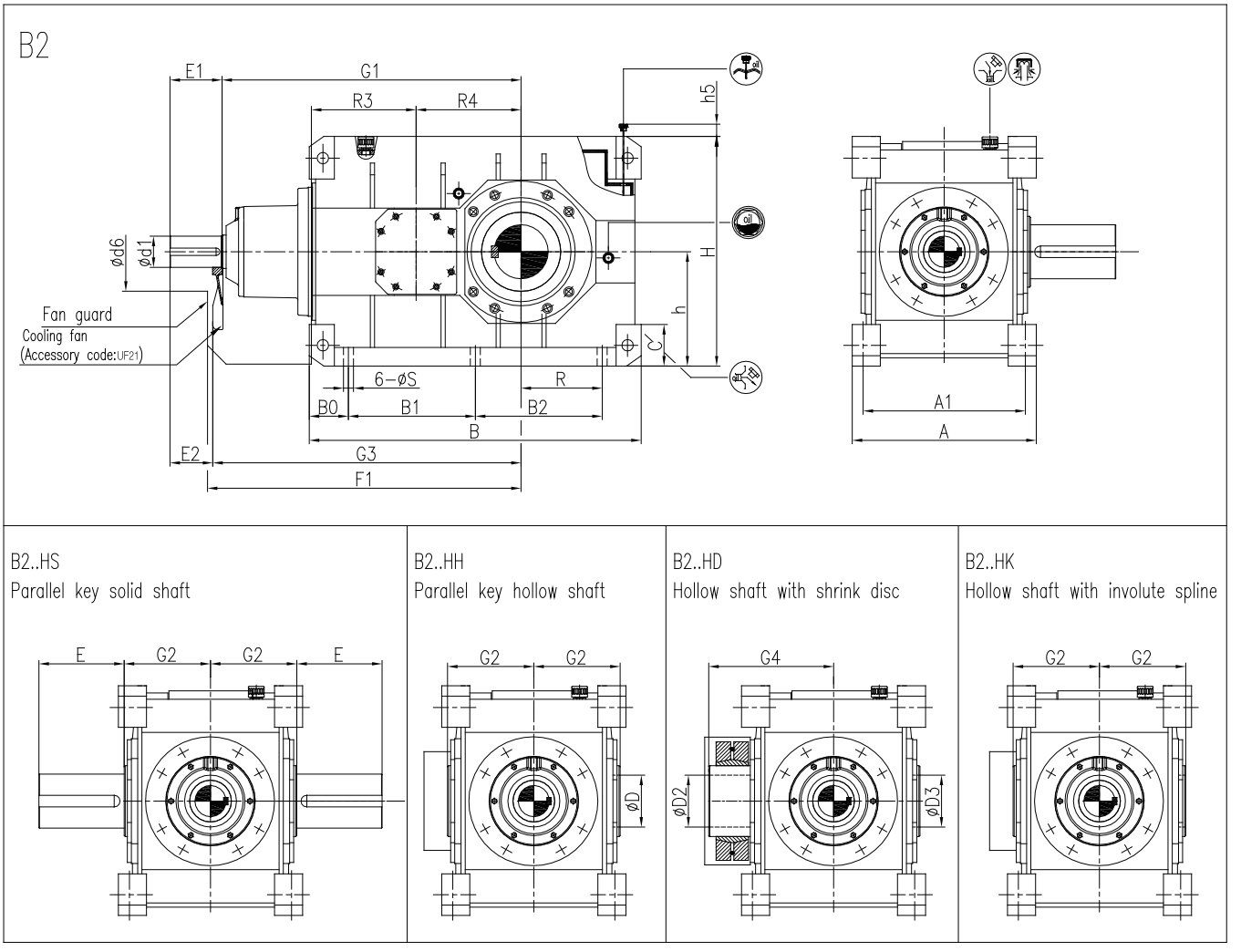

Size	iN=6.3-14			iN=7.1-14			A	A1	B	B0	B1	B2	C	d	d6	D	D2	D3
	d1	E1	E2	d1	E1	E2												
13	115m6	210	175				655	580	1205	137	465	465	60	200m6	245	190H7	190H7	190H7
14	115m6	210	175				655	580	1345	137	465	605	60	220m6	245	210H7	210H7	210H7
15	140m6	250	200				765	670	1430	160	555	555	70	240m6	280	230H7	230H7	230H7
16	140m6	250	200				765	670	1520	160	555	645	70	250m6	280	240H7	240H7	240H7
17	150m6	250	200				885	780	1595	188	610	610	80	260n6	380	250H7	250H7	250H7
18				150m6	250	200	885	780	1715	188	610	730	80	280n6	380	275H7	275H7	275H7

Size	E	F1	G1	G2	G3	G4	H	h	h5	P1	P2	P3	R	R3	R4	S	Weight(kg)
13	350	1175	1092	335	1127	480	870	440	60	430	450	375	305	370	392	35	2530
14	350	1245	1170	335	1205	480	885	440	20	430	450	375	375	370	470	35	2945
15	410	1385	1305	380	1355	550	1000	500	20	490	495	435	365	442	470	42	4230
16	410	1430	1330	380	1380	550	1035	500	60	490	495	435	410	442	495	42	4750
17	410	1520	1450	415	1500	600	1105	550	40	540	555	505	390	490	505	48	5990
18	470	1580	1515	415	1565	600	1110	550	100	540	555	505	450	490	570	48	6555

B313H-B318H

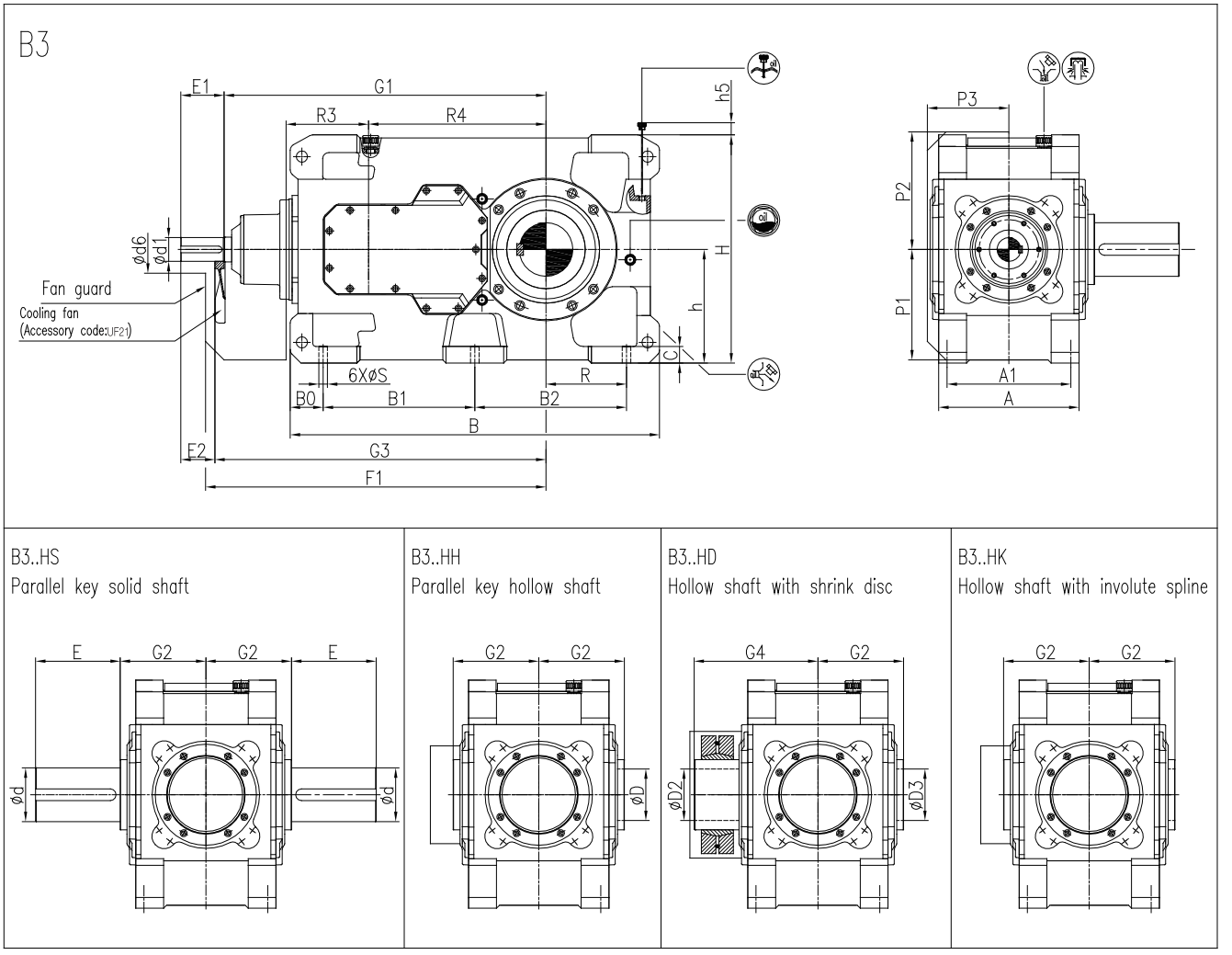

Size	iN=16-56			iN=16-63			iN=63-80			iN=71-90			A	A1	B	B0	B1	B2	C	d	d6
	d1	E1	E2	d1	E1	E2	d1	E1	E2	d1	E1	E2									
13				85m6	170	135				70m6	140	105	545	475	1375	142	545	545	60	200m6	210
14				85m6	170	135				70m6	140	105	545	475	1505	137	545	685	60	220m6	210
15				95m6	170	135				75m6	140	105	620	535	1630	160	655	655	70	240m6	210
16				95m6	170	135				75m6	140	105	620	535	1720	160	655	745	70	250m6	210
17	115m6	210	175				90m6	170	135				680	600	1790	160	735	735	80	260n6	230
18				115m6	210	175				90m6	170	135	680	600	1910	160	735	855	80	280n6	230

Size	D	D2	D3	E	F1	G1	G2	G3	G4	H	h	h5	P1	P2	P3	R	R3	R4	S	Weight(kg)
13	190H7	190H7	190H7	350	1165	1110	335	1145	480	875	440	40	425	435	325	305	265	635	35	2470
14	210H7	210H7	210H7	350	1235	1180	335	1215	480	940	440	40	425	435	325	375	265	705	35	3025
15	230H7	230H7	230H7	410	1420	1367	380	1402	550	1000	500	40	485	520	365	365	320	762	42	3925
16	240H7	240H7	240H7	410	1470	1413	380	1448	550	1035	500	40	485	520	365	410	320	808	42	4295
17	250H7	250H7	250H7	410	1620	1560	415	1595	600	1105	550	60	535	570	395	390	370	860	42	5110
18	275H7	275H7	275H7	470	1680	1620	415	1655	600	1110	550	60	535	570	395	450	370	920	42	5645

B413H-B418H

B4

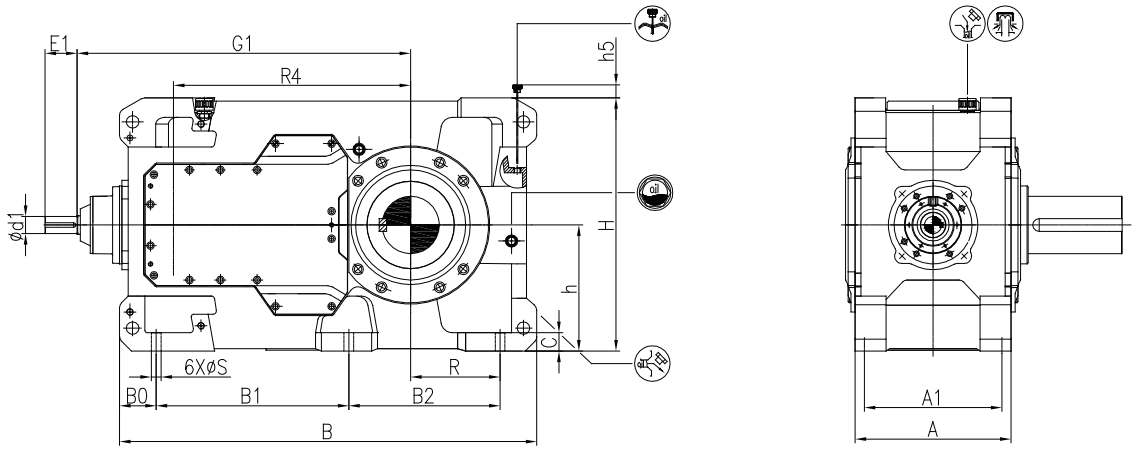

B4..HS
Parallel key solid shaft

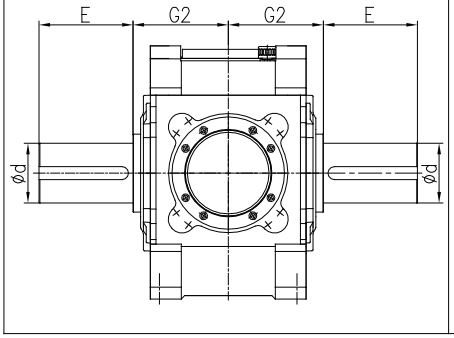

B4..HH
Parallel key hollow shaft

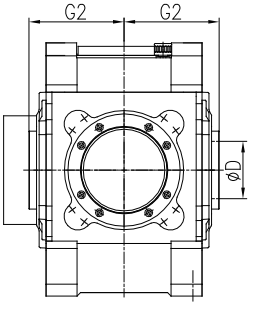

B4..HD
Hollow shaft with shrink disc

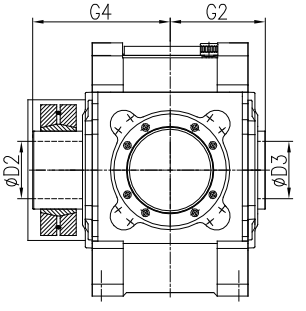

B4..HK
Hollow shaft with involute spline

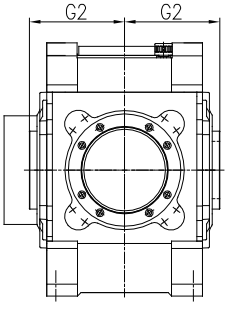

Size	iN=90-250		iN=100-280		iN=280-355		iN=315-400		A	A1	B	B0	B1	B2	C
	d1	E1	d1	E1	d1	E1	d1	E1							
13			60m6	140			50k6	110	545	475	1470	137	667.5	527.5	60
14			60m6	140			50k6	110	545	475	1610	137	667.5	667.5	60
15			75m6	140			60m6	140	620	535	1760	161	840	600	70
16			75m6	140			60m6	140	620	535	1850	160	840	690	70
17	75m6	140			60m6	140			680	600	1820	160	840	660	80
18			75m6	140			60m6	140	680	600	1940	160	840	780	80

Size	d	D	D2	D3	E	G1	G2	G4	H	h	h5	R	R4	S	Weight(kg)
13	200m6	190H7	190H7	190H7	350	1170	335	480	875	440	0	305	820	35	2455
14	220m6	210H7	210H7	210H7	350	1240	335	480	940	440	40	375	890	35	3000
15	240m6	230H7	230H7	230H7	410	1407	380	550	1000	500	60	365	987	42	3805
16	250m6	240H7	240H7	240H7	410	1453	380	550	1035	500	20	410	1033	42	4315
17	260n6	250H7	250H7	250H7	410	1455	415	600	1105	550	60	390	1035	42	4810
18	280n6	275H7	275H7	275H7	470	1515	415	600	1110	550	70	450	1095	42	5340

H213V-H218V

H2(With forced lubrication)

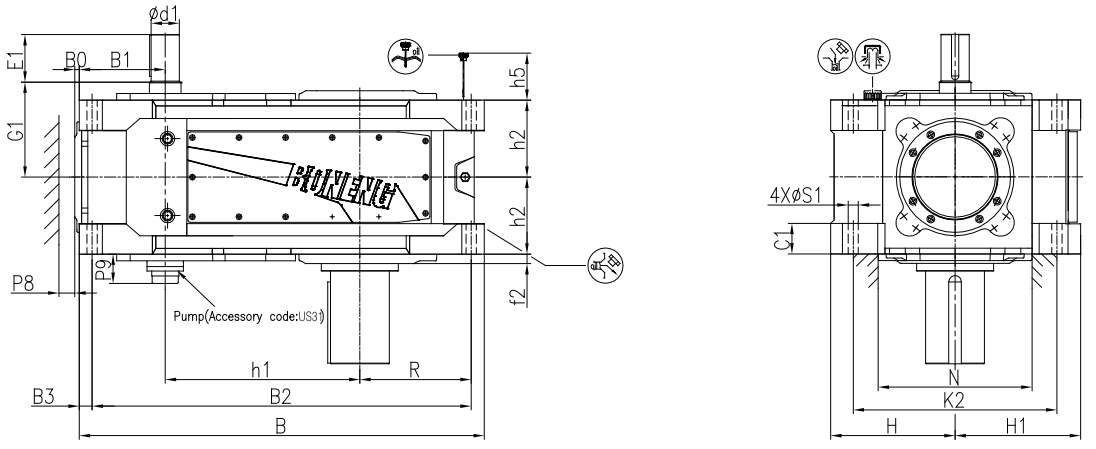

H2..VS
Parallel key solid shaft

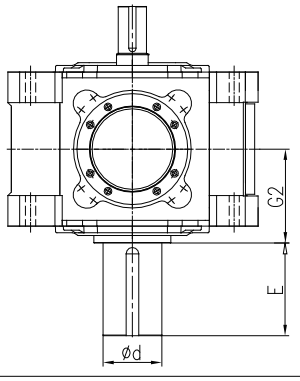

H2..VH
Parallel key hollow shaft

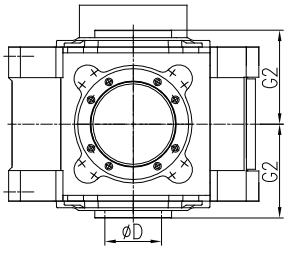

H2..VD
Hollow shaft with shrink disc

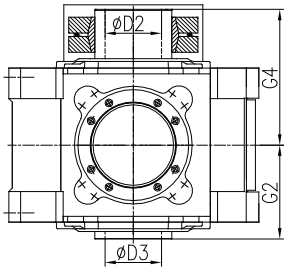

H2..VK
Hollow shaft with involute spline

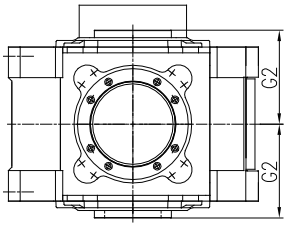

Size	iN=3.15-11.2		iN=3.15-12.5		iN=12.5-20		iN=14-20		B	B0	B1	B2	B3	C1	d	D
	d1	E1	d1	E1	d1	E1	d1	E1								
13	100m6	210			85m6	170			1375	0	292	1270	52	105±2	200m6	190H7
14	100m6	210			85m6	170			1505	2	287	1410	47	105±2	220m6	210H7
15	120m6	210			100m6	210			1630	7	343	1515	57	125±2	240m6	230H7
16	120m6	210			100m6	210			1720	8	342	1605	57	125±2	250m6	240H7
17	125m6	210			110m6	210			1790	20	380	1675	57	135±2	260n6	250H7
18			125m6	210			110m6	210	1910	20	380	1795	57	135±2	280n6	275H7

Size	D2	D3	E	f2	G1	G2	G4	H	H1	h1	h2	h5	K2	N	P8	P9	R	S1	Weight(kg)
13	190H7	190H7	350	35	330	335	480	440	435	635	272.5	210	720	550	50	130	395	48	2075
14	210H7	210H7	350	35	330	335	480	440	500	705	272.5	210	740	570	50	130	465	48	2825
15	230H7	230H7	410	32	365	380	550	500	500	762	310	230	820	640	50	130	467	55	3610
16	240H7	240H7	410	32	365	380	550	500	535	808	310	230	860	650	50	130	512	55	3970
17	250H7	250H7	410	42	420	415	600	550	555	860	340	250	900	690	70	170	492	55	4765
18	275H7	275H7	470	42	420	415	600	550	560	920	340	250	900	710	70	170	552	55	5265

*The general mounting is up position, if down mounting position, please mention in the order.

H313V-H318V

H3(With forced lubrication)

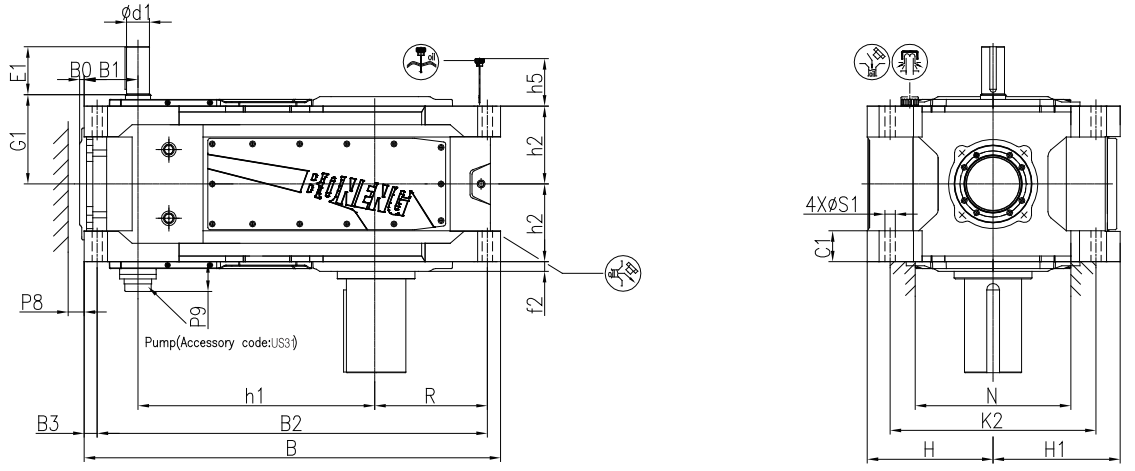

H3..VS
Parallel key solid shaft

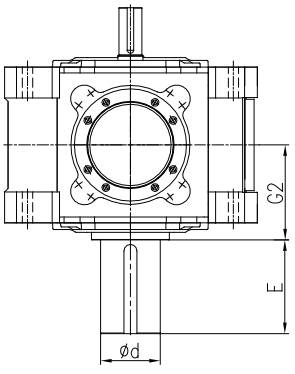

H3..VH
Parallel key hollow shaft

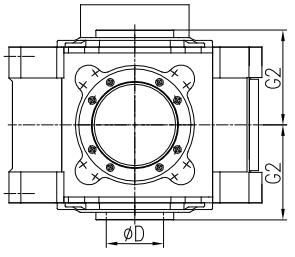

H3..VD
Hollow shaft with shrink disc

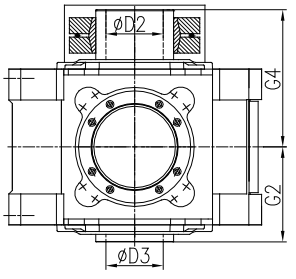

H3..VK
Hollow shaft with involute spline

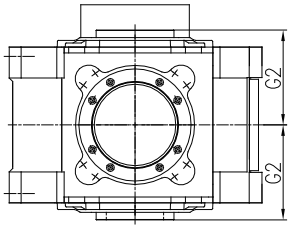

Size	iN=14-45		iN=16-50		iN=50-100		iN=56-100		iN=56-112		B	B0	B1	B2	B3	C1	d	D
	d1	E1	d1	E1	d1	E1	d1	E1	d1	E1								
13			85m6	170			60m6	140			1470	0	207	1375	47	105±2	200m6	190H7
14			85m6	170			60m6	140			1610	0	207	1515	48	105±2	220m6	210H7
15			100m6	210					75m6	140	1760	0	249	1655	51	125±2	240m6	230H7
16			100m6	210					75m6	140	1850	2	247	1735	57	125±2	250m6	240H7
17	100m6	210			75m6	140					1820	14	235	1705	57	135±2	260n6	250H7
18			100m6	210					75m6	140	1940	14	235	1825	57	135±2	280n6	275H7

Size	D2	D3	E	f2	G1	G2	G4	H	H1	h1	h2	h5	K2	N	P8	P9	R	S1	Weight(kg)
13	190H7	190H7	350	35	325	335	480	440	435	820	272.5	210	720	570	50	170	395	48	2355
14	210H7	210H7	350	35	325	335	480	440	500	890	272.5	210	740	570	50	170	465	48	2880
15	230H7	230H7	410	32	365	380	550	500	500	987	310	230	820	710	50	170	470	55	3640
16	240H7	240H7	410	32	365	380	550	500	535	1033	310	230	860	710	50	170	512	55	4195
17	250H7	250H7	410	42	400	415	600	550	555	1035	340	250	900	790	70	210	492	55	4670
18	275H7	275H7	470	42	400	415	600	550	560	1095	340	250	900	790	70	210	552	55	5165

*The general mounting is up position, if down mounting position, please mention in the order.

H413V-H418V

H4(With forced lubrication)

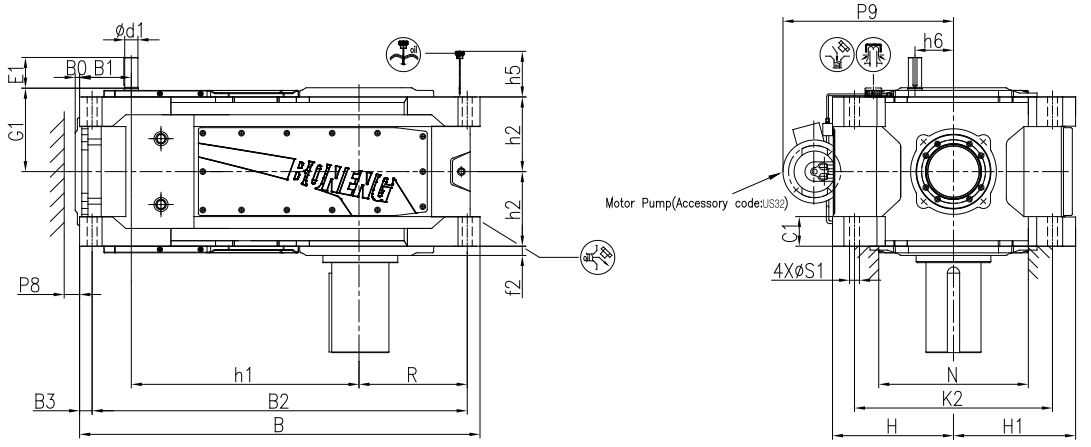

H4..VS
Parallel key solid shaft

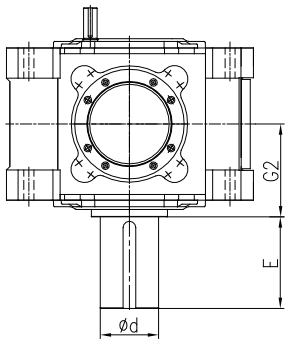

H4..VH
Parallel key hollow shaft

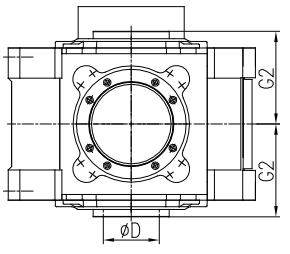

H4..VD
Hollow shaft with shrink disc

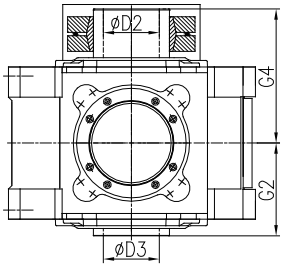

H4..VK
Hollow shaft with involute spline

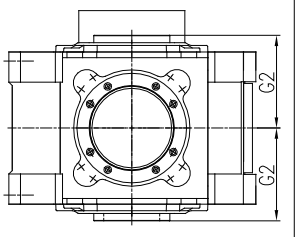

Size	iN=63-200		iN=71-224		iN=224-400		iN=250-450		B	B0	B1	B2	B3	C1	d	D	D2	D3
	d1	E1	d1	E1	d1	E1	d1	E1										
13			50k6	110			38k6	80	1470	0	207	1375	47	105±2	200m6	190H7	190H7	190H7
14			50k6	110			38k6	80	1610	0	207	1515	48	105±2	220m6	210H7	210H7	210H7
15			60m6	140			50k6	110	1760	0	249	1655	51	125±2	240m6	230H7	230H7	230H7
16			60m6	140			50k6	110	1850	2	247	1735	57	125±2	250m6	240H7	240H7	240H7
17	60m6	140			50k6	110			1820	14	235	1705	57	135±2	260n6	250H7	250H7	250H7
18			60m6	140			50k6	110	1940	14	235	1825	57	135±2	280n6	275H7	275H7	275H7

Size	E	f2	G1	G2	G4	H	H1	h1	h2	h5	h6	K2	N	P8	P9	R	S1	Weight(kg)
13	350	35	305	335	480	440	435	820	272.5	210	140	720	570	50	670	395	48	2450
14	350	35	305	335	480	440	500	890	272.5	210	140	740	570	50	670	465	48	2995
15	410	32	345	380	550	500	500	987	310	230	175	820	710	50	710	470	55	3810
16	410	32	345	380	550	500	535	1033	310	230	175	860	710	50	710	512	55	4290
17	410	42	380	415	600	550	555	1035	340	250	175	900	790	70	775	492	55	4795
18	470	42	380	415	600	550	560	1095	340	250	175	900	790	70	775	552	55	5325

*The general mounting is up position, if down mounting position, please mention in the order.

B213V-B218V

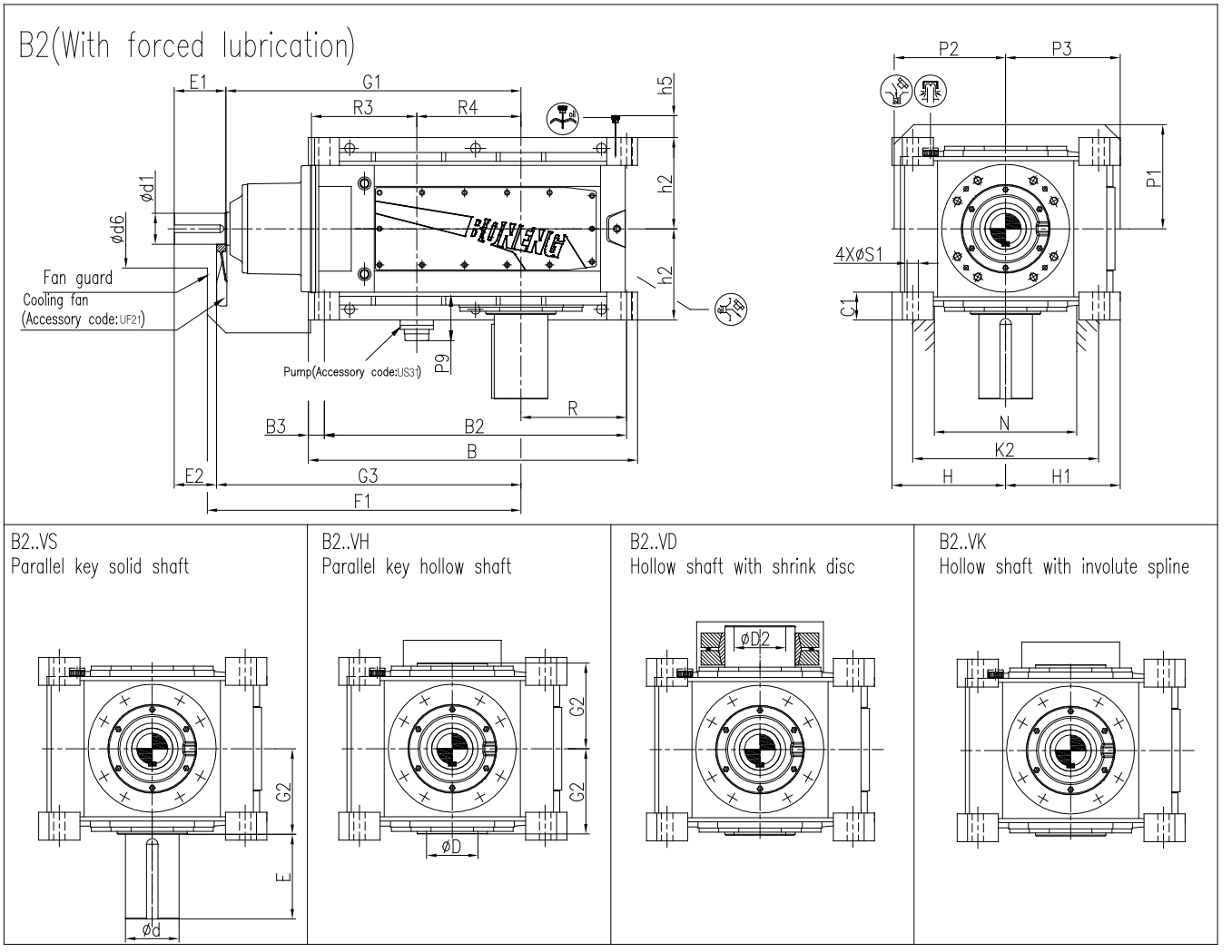

Size	iN=6.3-14			iN=7.1-14			B	B2	B3	C1	d	d6	D	D2	D3	E	F1	f 2	G1
	d1	E1	E2	d1	E1	E2													
13	115m6	210	175				1205	1110	47	105±2	200m6	245	190H7	190H7	190H7	350	1175	35	1092
14	115m6	210	175				1345	1250	47	105±2	220m6	245	210H7	210H7	210H7	350	1245	35	1170
15	140m6	250	200				1430	1315	57	125±2	240m6	280	230H7	230H7	230H7	410	1385	32	1305
16	140m6	250	200				1520	1405	57	125±2	250m6	280	240H7	240H7	240H7	410	1430	32	1330
17	150m6	250	200				1595	1465	65	135±2	260n6	380	250H7	250H7	250H7	410	1520	42	1450
18				150m6	250	200	1715	1585	65	135±2	280n6	380	275H7	275H7	275H7	470	1580	42	1515

Size	G2	G3	G4	H	H1	h2	h5	K2	N	P1	P2	P3	P9	R	R3	R4	S1	Weight(kg)
13	335	1127	480	440	430	325	210	720	550	375	430	450	200	395	370	392	48	2530
14	335	1205	480	440	445	325	210	740	570	375	430	450	200	465	370	470	48	2945
15	380	1355	550	500	500	380	230	820	590	435	490	495	200	467	442	470	55	4230
16	380	1380	550	500	535	380	230	860	650	435	490	495	200	512	442	495	55	4750
17	415	1500	600	550	555	437.5	250	900	690	505	540	555	200	512	490	505	55	5990
18	415	1565	600	550	560	437.5	250	900	710	505	540	555	200	572	490	570	55	6555

*The general mounting is up position, if down mounting position, please mention in the order.

B313V-B318V

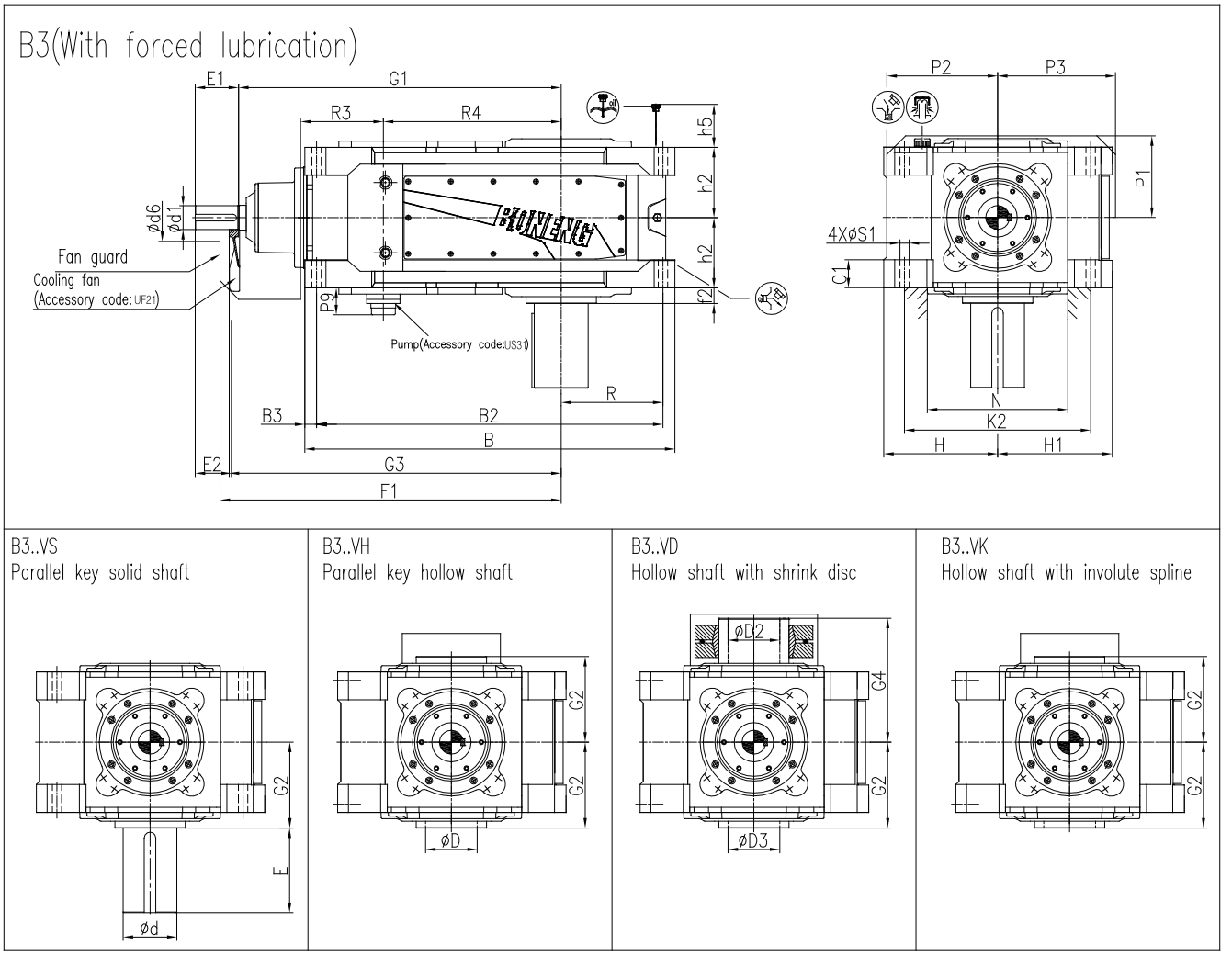

Size	iN=16-56			iN=16-63			iN=63-80			iN=71-90			B	B2	B3	C1	d	d6	D	D2	D3
	d1	E1	E2	d1	E1	E2	d1	E1	E2	d1	E1	E2									
13				85m6	170	135				70m6	140	105	1365	1270	52	105±2	200m6	210	190H7	190H7	190H7
14				85m6	170	135				70m6	140	105	1505	1410	47	105±2	220m6	210	210H7	210H7	210H7
15				95m6	170	135				75m6	140	105	1630	1515	57	125±2	240m6	210	230H7	230H7	230H7
16				95m6	170	135				75m6	140	105	1720	1605	57	125±2	250m6	210	240H7	240H7	240H7
17	115m6	210	175				90m6	170	135				1790	1675	57	135±2	260n6	230	250H7	250H7	250H7
18				115m6	210	175				90m6	170	135	1910	1795	57	135±2	280n6	230	275H7	275H7	275H7

Size	E	F1	f2	G1	G2	G3	G4	H	H1	h2	h5	K2	N	P1	P2	P3	P9	R	R3	R4	S1	Weight(kg)
13	350	1165	35	1110	335	1145	480	440	635	272.5	210	720	550	325	425	435	170	395	265	635	48	2470
14	350	1235	35	1180	335	1215	480	440	705	272.5	210	740	570	325	425	435	170	465	265	705	48	3025
15	410	1420	32	1367	380	1402	550	500	762	310	230	820	640	365	485	520	170	467	320	762	55	3925
16	410	1470	32	1413	380	1448	550	500	808	310	230	860	650	365	485	520	170	512	320	808	55	4295
17	410	1620	42	1560	415	1595	600	550	860	340	250	900	690	395	535	570	170	492	370	860	55	5110
18	470	1680	42	1620	415	1655	600	550	920	340	250	900	710	395	535	570	170	552	370	920	55	5645

*The general mounting is up position, if down mounting position, please mention in the order.

B413V-B418V

B4(With forced lubrication)

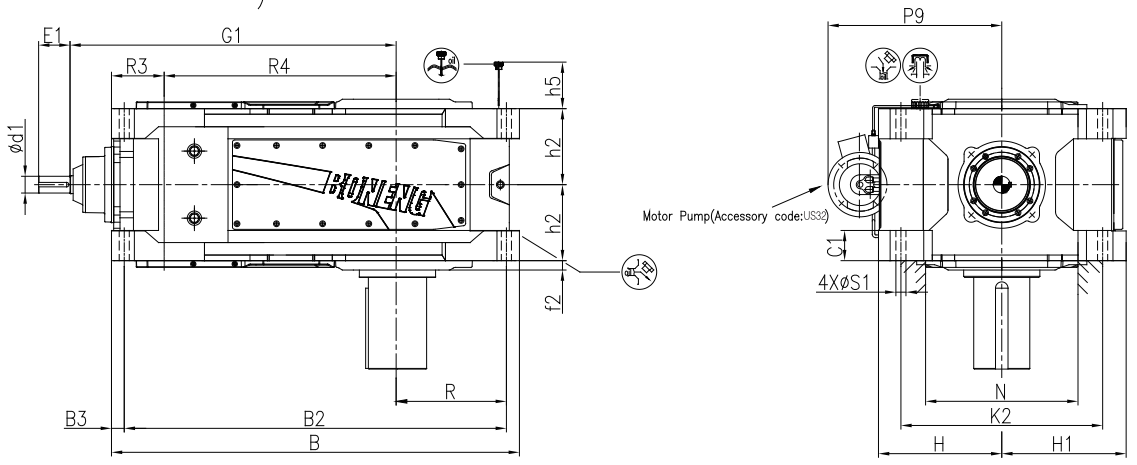

B4..VS
Parallel key solid shaft

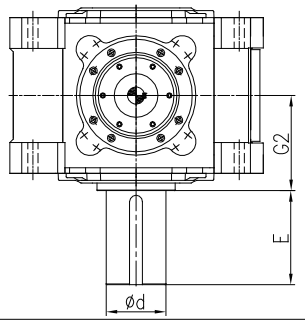

B4..VH
Parallel key hollow shaft

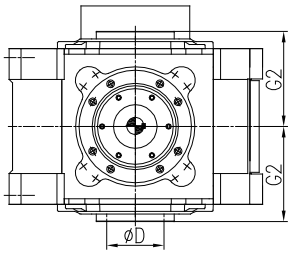

B4..VD
Hollow shaft with shrink disc

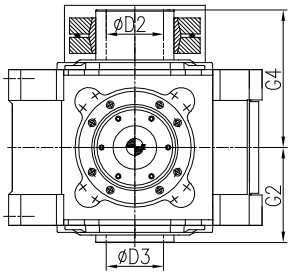

B4..VK
Hollow shaft with involute spline

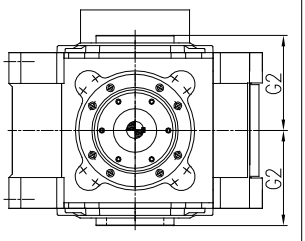

Size	iN=90-250		iN=100-280		iN=280-355		iN=315-400		B	B2	B3	C1	d	D	D2	D3
	d1	E1	d1	E1	d1	E1	d1	E1								
13			60m6	140			50k6	110	1470	1375	47	105±2	200m6	190H7	190H7	190H7
14			60m6	140			50k6	110	1610	1515	48	105±2	220m6	210H7	210H7	210H7
15			75m6	140			60m6	140	1760	1655	51	125±2	240m6	230H7	230H7	230H7
16			75m6	140			60m6	140	1850	1735	57	125±2	250m6	240H7	240H7	240H7
17	75m6	140			60m6	140			1820	1705	57	135±2	260n6	250H7	250H7	250H7
18			75m6	140			60m6	140	1940	1825	57	135±2	280n6	275H7	275H7	275H7

Size	E	f2	G1	G2	G4	H	H1	h2	h5	K2	N	P9	R	R4	S1	Weight(kg)
13	350	35	1170	335	480	440	435	272.5	210	720	570	670	395	820	48	2455
14	350	35	1240	335	480	440	500	272.5	210	740	570	670	465	890	48	3000
15	410	32	1407	380	550	500	500	310	230	820	710	710	470	987	55	3805
16	410	32	1453	380	550	500	535	310	230	860	710	710	512	1033	55	4315
17	410	42	1455	415	600	550	555	340	250	900	790	775	492	1035	55	4810
18	470	42	1515	415	600	550	560	340	250	900	790	775	552	1095	55	5340

*The general mounting is up position, if down mounting position, please mention in the order.

12 Shaft end central hole:

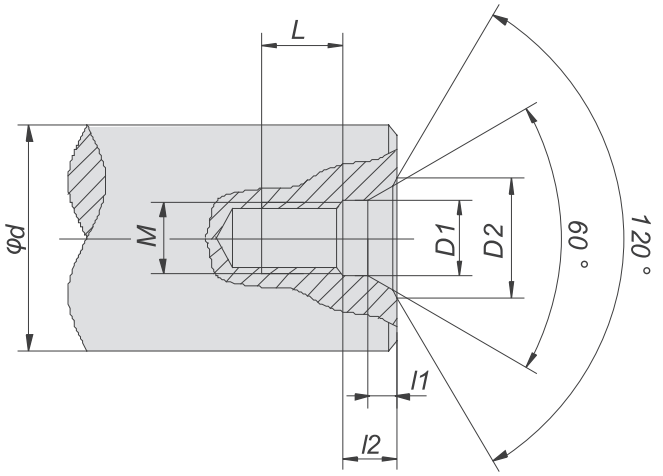

d	M	L	12	11	D1	D2
7 ＜ d≤10	M3	10	2.6	1.8	3.2	5.8
10＜ d ≤13	M4	10	3.2	2.1	4.3	7.4
13＜ d ≤16	M5	10	4	2.4	5.3	8.8
16＜ d ≤21	M6	12	5	2.8	6.4	10.5
21＜ d ≤24	M8	12	6	3.3	8.4	13.2
24＜ d ≤30	M10	15	7.5	3.8	10.5	16.3
30＜ d ≤38	M12	20	9.5	4.4	13	19.8
38＜ d ≤50	M16	25	12	5.2	17	25.3
50＜ d ≤85	M20	30	15	6.4	21	31.3
85＜ d≤130	M24	35	18	8	26	38
130＜ d ≤225	M30	45	18	11	31	48
225＜ d ≤320	M36	55	22	15	37	60
320＜ d ≤500	M42	60	26	19	43	71
500＜ d ≤710	M48	65	30	23	49	83

13 Dimension of parallel key and keyway:

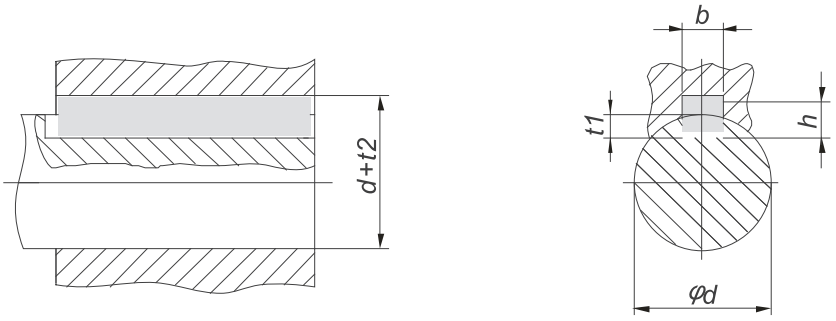

d	b	h	t_1	$d+t_2$
8< d ≤ 10	3	3	1.8	d + 1.4
10< d ≤ 12	4	4	2.5	d + 1.8
12< d ≤ 17	5	5	3	d + 2.3
17< d ≤ 22	6	6	3.5	d + 2.8
22< d ≤ 30	8	7	4	d + 3.3
30< d ≤ 38	10	8	5	d + 3.3
38< d ≤ 44	12	8	5	d + 3.3
44< d ≤ 50	14	9	5.5	d + 3.8
50< d ≤ 58	16	10	6	d + 4.3
58< d ≤ 65	18	11	7	d + 4.4
65< d ≤ 75	20	12	7.5	d + 4.9
75< d ≤ 85	22	14	9	d + 5.4
85< d ≤ 95	25	14	9	d + 5.4
95< d ≤ 110	28	16	10	d + 6.4
110< d ≤ 130	32	18	11	d + 7.4
130< d ≤ 150	36	20	12	d + 8.4
150< d ≤ 170	40	22	13	d + 9.4
170< d ≤ 200	45	25	15	d + 10.4
200< d ≤ 230	50	28	17	d + 11.4
230< d ≤ 260	56	32	20	d + 12.4
260< d ≤ 290	63	32	20	d + 12.4
290< d ≤ 330	70	36	22	d + 14.4
330< d ≤ 380	80	40	25	d + 15.4
380< d ≤ 440	90	45	28	d + 17.4
440< d ≤ 500	100	50	31	d + 19.5
500< d ≤ 560	110	56	34.3	d + 22.2
560 < d ≤ 640	120	63	39	d + 24.5

14 Suggested output connection dimensions:

14.1 Hollow shaft with parallel key connection:

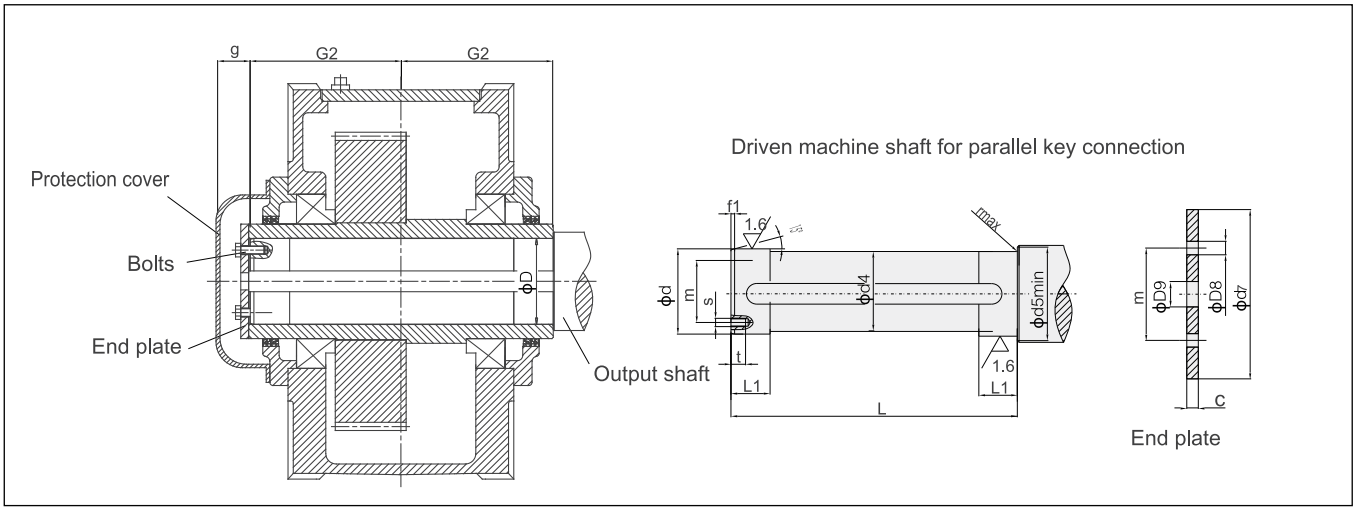

Type H2...H,H3...H,H4...H,B3...H,B4...H(Size 13-18)

Size	Driven equipment shaft									End plate					Bolt		Hollow shaft		
	d	d4	d5	f1	L	L1	r	s	t	c	D8	D9	d7	m	Size	Number	D	G2	g
13	190h6	189.5	206	7	667	80	3	M16	28	18	17.5	33	230	140	M16x40	2	190H7	335	42.5
14	210h6	209.5	226	8	667	85	3	M16	28	18	17.5	33	250	160	M16x40	2	210H7	335	42.5
15	230h6	229.5	248	8	756	100	3	M20	38	25	22	39	270	180	M20x55	4	230H7	380	57
16	240h6	239.5	258	8	756	100	3	M20	38	25	22	39	280	180	M20x55	4	240H7	380	57
17	250h6	249.5	270	8	826	110	4	M20	38	25	22	39	300	190	M20x55	4	250H7	415	57
18	275h6	274.5	295	9	826	120	4	M20	38	25	22	39	330	210	M20x55	4	275H7	415	57

Type B2...H(Size 13-18)

Size	Driven equipment shaft									End plate					Bolt		Hollow shaft		
	d	d4	d5	f1	L	L1	r	s	t	c	D8	D9	d7	m	Size	Number	D	G2	g
13	190h6	189.5	206	7	667	80	3	M16	28	18	17.5	33	230	140	M16x40	2	190H7	335	65
14	210h6	209.5	226	8	667	85	3	M16	28	18	17.5	33	250	160	M16x40	2	210H7	335	65
15	230h6	229.5	248	8	756	100	3	M20	38	25	22	39	270	180	M20x55	4	230H7	380	92
16	240h6	239.5	258	8	756	100	3	M20	38	25	22	39	280	180	M20x55	4	240H7	380	92
17	250h6	249.5	270	8	826	110	4	M20	38	25	22	39	300	190	M20x55	4	250H7	415	97
18	275h6	274.5	295	9	826	120	4	M20	38	25	22	39	330	210	M20x55	4	275H7	415	97

⚠ Note: 1.Material of driven equipment shaft:40Cr or steel with higher strength.
2.Shaft and parallel key of driven equipment are not within the scope of supply. Please order if required.
3.Protection cover, end plate and bolts are supplied with gearbox as standard.

14.2 Hollow shaft for shrink Disks:

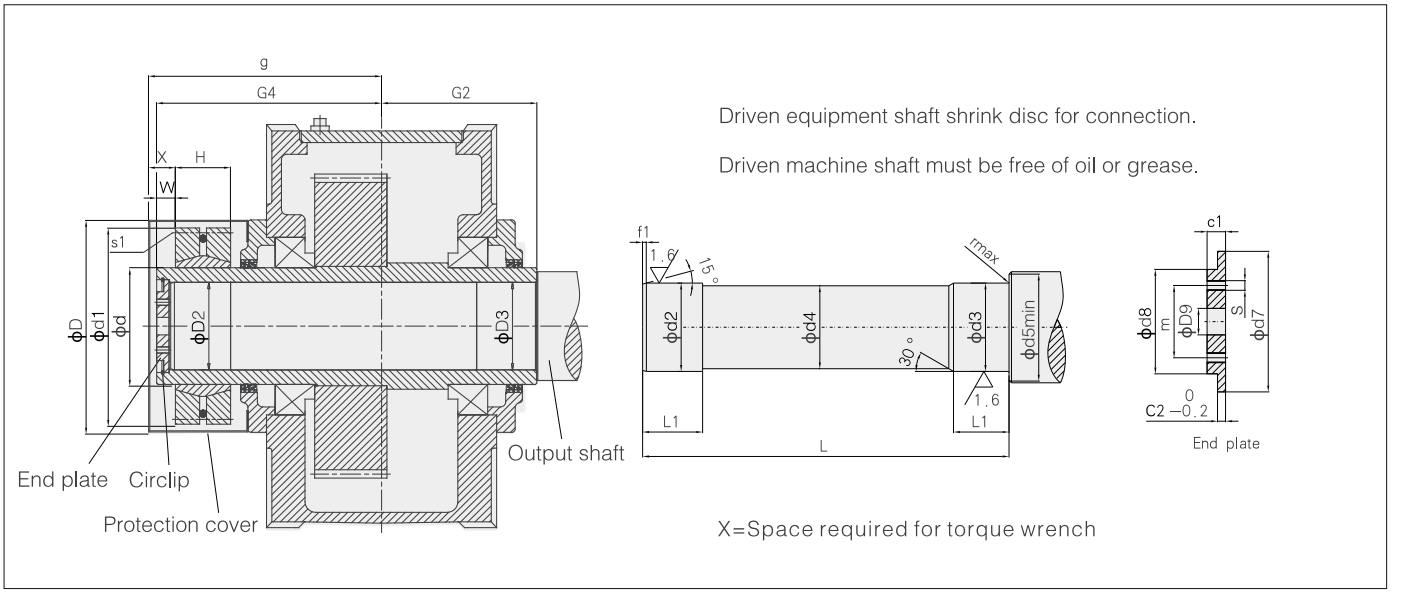

Types H2…D,H3…D,H4…D,B3…D,B4…D（size 13-18）

Size	Driven equipment shaft								End plate								Circlip	Hollow shaft				Shrink disc					Bolt	Protection cover	
	d2	d3	d4	d5	f1	L	L1	r	c1	c2	d7	d8	D9	m	s	Number		D2	D3	G2	G4	Type	d	d1	H	W	s1	D	g
13	190f6	190g6	189.5	213	7	789	137	5	23	10	200	150	33	110	M16	2	200	190H7	190	335	480	SP2-260	260	430	119	30	M20	480	510.5
14	210f6	210g6	209.5	233	8	784	147	5	28	14	220	170	33	130	M16	2	220	210H7	210	335	480	SP2-280	280	460	132	30	M20	480	510.5
15	230f6	230g6	229.5	253	8	899	157	5	28	14	240	180	39	140	M16	2	240	230H7	230	380	550	SP2-300	300	485	140	35	M20	540	590
16	240f6	240g6	239.5	263	8	899	157	5	28	14	250	190	39	150	M20	2	250	240H7	240	380	550	SP2-320	320	520	140	35	M20	540	590
17	250f6	250g6	249.5	278	8	982	177	5	30	14	265	200	39	150	M20	2	265	250H7	250	415	600	SP2-340	340	570	155	35	M20	620	640
18	280f6	280g6	279.5	306	9	982	177	5	30	14	290	210	39	160	M20	2	290	280H7	280	415	600	SP2-360	360	590	162	35	M24	620	640

Type B2...D(Size 13-18)

Size	Driven equipment shaft								End plate								Circlip	Hollow shaft				Shrink disc					Bolt	Protection cover	
	d2	d3	d4	d5	f1	L	L1	r	c1	c2	d7	d8	D9	m	s	Number		D2	D3	G2	G4	Type	d	d1	H	W	s1	D	g
13	190f6	190g6	189.5	213	7	789	137	5	23	10	200	150	33	110	M16	2	200	190H7	190	335	480	SP2-260	260	430	119	30	M20	480	533
14	210f6	210g6	209.5	233	8	784	147	5	28	14	220	170	33	130	M16	2	220	210H7	210	335	480	SP2-280	280	460	132	30	M20	480	533
15	230f6	230g6	229.5	253	8	899	157	5	28	14	240	180	39	140	M16	2	240	230H7	230	380	550	SP2-300	300	485	140	35	M20	540	625
16	240f6	240g6	239.5	263	8	899	157	5	28	14	250	190	39	150	M20	2	250	240H7	240	380	550	SP2-320	320	520	140	35	M20	540	625
17	250f6	250g6	249.5	278	8	982	177	5	30	14	265	200	39	150	M20	2	265	250H7	250	415	600	SP2-340	340	570	155	35	M20	620	670
18	280f6	280g6	279.5	306	9	982	177	5	30	14	290	210	39	160	M20	2	290	280H7	280	415	600	SP2-360	360	590	162	35	M24	620	670

⚠ Note: 1.Material of driven equipment shaft: 40cr or steel with higher strength.
2.Driven equipment shaft is not in scope of supply, please order if required.
3.Shrink disc, protection cover, end plate and circlip are supplied with gearbox as standard.
4.Driven machine shaft must be free of oil or grease.

14.3 Hollow shaft with involute spline:

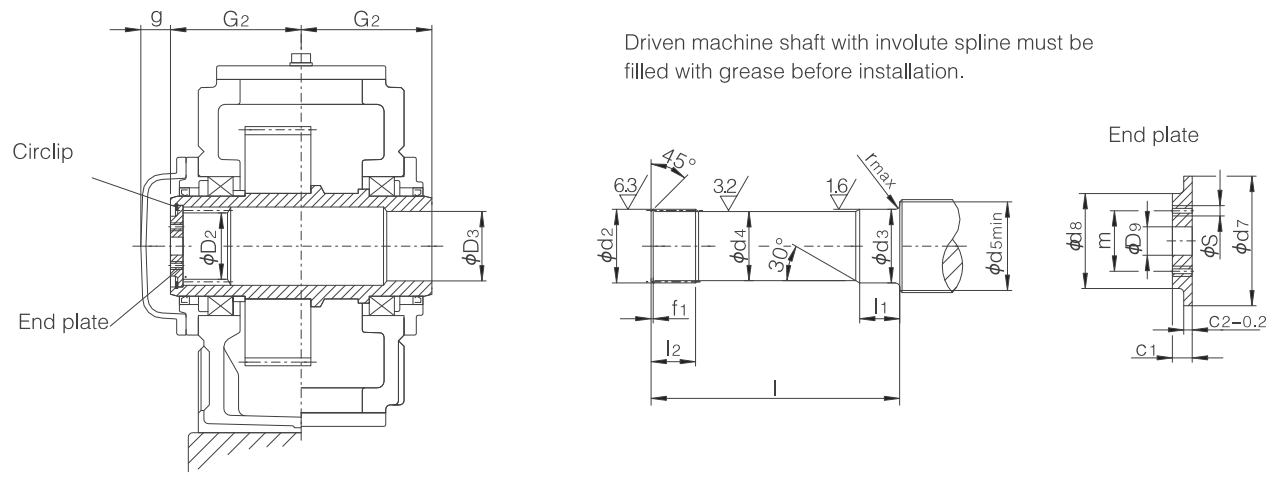

Driven machine shaft with DS center hole machined acc. to DIN 332.

Types H2…K,H3…K,H4…K,B2…K,B3…K,B4…K（size 13-18）

Size	Involute splines DIN5480	Driven equipment shaft									End plate								Circlip	Hollow shaft				Bolt
		d2	d3	d4	d5	f1	L	L1	L2	r	c1	c2	d7	d8	D9	m	s	Number		D2	D3	G2	G	s1
13	W190x5x30x36x8f	189h11	195g6	188	213	5	644	137	180	5	23	10	200d9	150	33	110	M16	2	200	180H11	195H7	335	42.5	M30
14	W190x5x30x36x8f	189h11	215g6	188	233	5	644	147	180	5	23	10	200d9	150	33	110	M16	2	200	180H11	215H7	335	42.5	M20
15-18	On request																							

⚠Note: 1.Material of driven equipment shaft: 40cr or steel with higher strength.
2.Driven equipment shaft is not in scope of supply, please order if required.
3.Shrink disc, protection cover, end plate and circlip are supplied with gearbox as standard.
4.Driven machine shaft with involute spline must be filled with grease before installation.

15 Input with motor and flange input(Code:AF)

H3

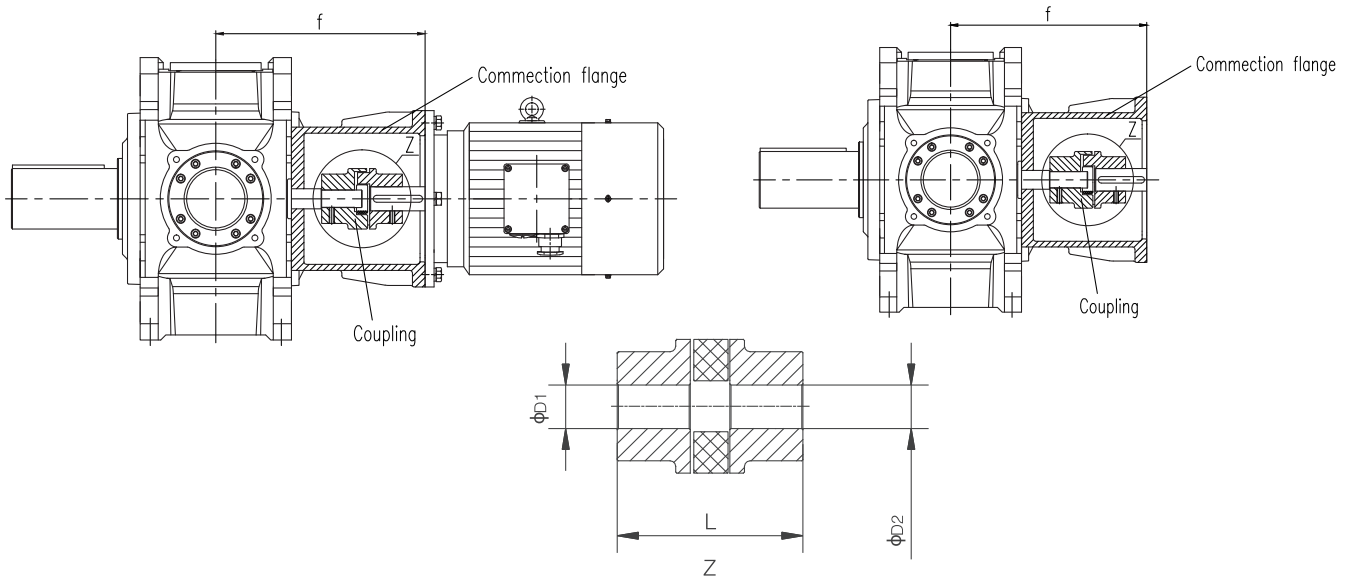

H3			iN≤50(Size：13、14、15、16、18) iN≤45(Size：17)					iN≥56(Size：13、14、15、16、18) iN≥50(Size：17)				
Size	M Motor	AF Flange	Coupling				f	Coupling				f
			Type	D1	D2	L		Type	D1	D2	L	
13/14	250							GA75	60	65	210	615
	280							GA75	60	75	210	615
	315		GA90	85	80	245	675	GA90	60	80	245	675
	355		GC110	85	95	185	675	GC110	60	95	185	675
15/16	250							GA75	75	65	210	660
	280							GA75	75	75	210	660
	315		GC110	100	80	185	755	GA90	75	80	245	755
	355		GC110	100	95	185	755	GC110	75	95	185	755
17/18	315							GA90	75	80	245	725
	355		GC110	100	95	185	790	GC110	75	95	185	790

H4

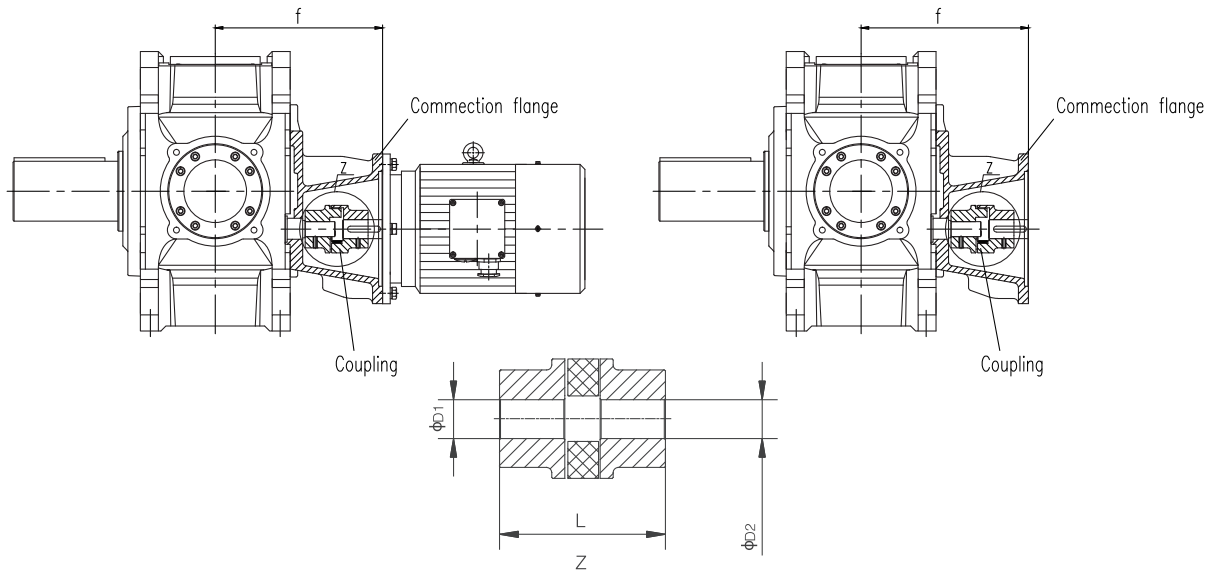

H4			iN≤224(Size：13、14、15、16、18) iN≤200(Size：17)					iN≥250(Size：13、14、15、16、18) iN≥224(Size：17)				
Size	M Motor	AF Flange	Coupling				f	Coupling				f
			Type	D1	D2	L		Type	D1	D2	L	
13/14	160							GA55	38	42	160	533
	180							GA55	38	48	160	533
	200		GA65	50	55	185	542	GA65	38	55	185	542
	225		GA65	50	60	185	572	GA65	38	60	185	572
	250		GA75	50	65	210	575	GA75	38	65	210	575
	280		GA75	50	75	210	575					
15/16	200							GA65	50	55	185	617
	225		GA65	60	60	185	647	GA65	50	60	185	647
	250		GA75	60	65	210	650	GA75	50	65	210	650
	280		GA75	60	75	210	650	GA75	50	75	210	650
17/18	225							GA65	50	60	185	677
	250							GA75	50	65	210	680
	280		GA75	60	75	210	680	GA75	50	75	210	680
	315		GA90	60	80	245	734	GA90	50	80	245	734

B3

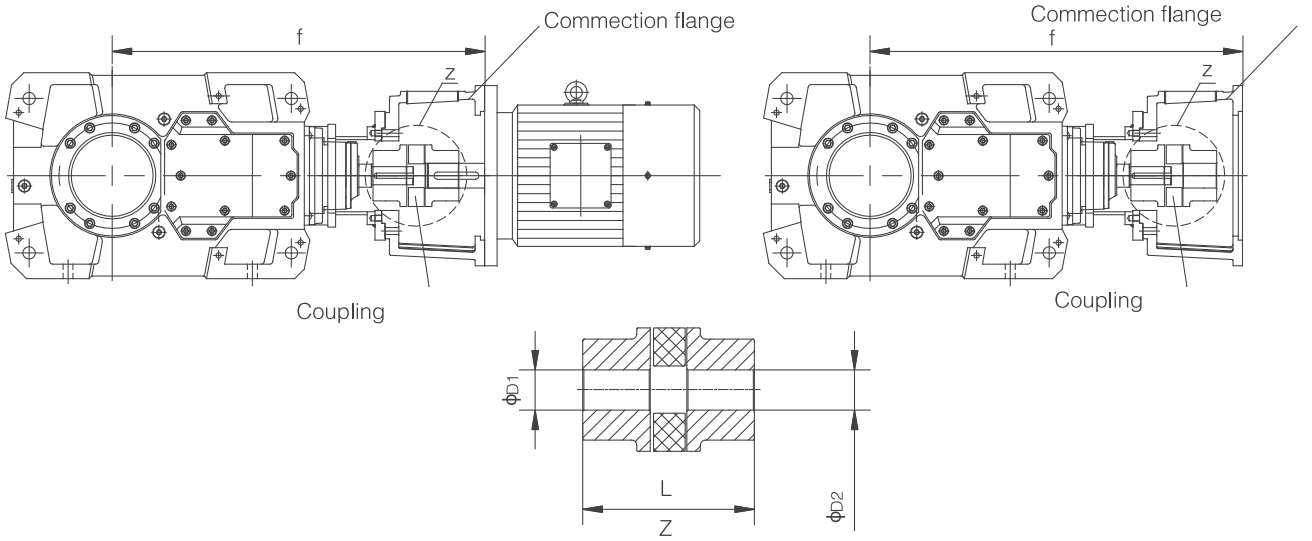

B3			iN≤63(Size:13、14、15、16、18) iN≤56(Size:17)					iN≥71(Size:13、14、15、16、18) iN≥63(Size:17)				
Size	M Motor	AF Flange	Coupling				f	Coupling				f
			Type	D1	D2	L		Type	D1	D2	L	
13	250							GA75	70	65	210	1420
	280							GA75	70	75	210	1420
	315		GA90	85	80	245	1474	GA90	70	80	245	1474
	355		GC110	85	95	185	1474	GC110	70	95	185	1474
14	250							GA75	70	65	210	1490
	280							GA75	70	75	210	1490
	315		GA90	85	80	245	1544	GA90	70	80	245	1544
	355		GC110	85	95	185	1544	GC110	70	95	185	1544
15	315		GC110	95	80	185	1731	GA90	75	80	245	1731
	355		GC110	95	95	185	1731	GC110	75	95	185	1731
16	315		GC110	95	80	185	1777	GA90	75	80	245	1777
	355		GC110	95	95	185	1777	GC110	75	95	185	1777
17	315							GA90	90	80	245	1959
	355		GC110	115	95	185	1959	GC110	90	95	185	1959
18	315							GA90	90	80	245	2019
	355		GC110	115	95	185	2019	GC110	90	95	185	2019

B4

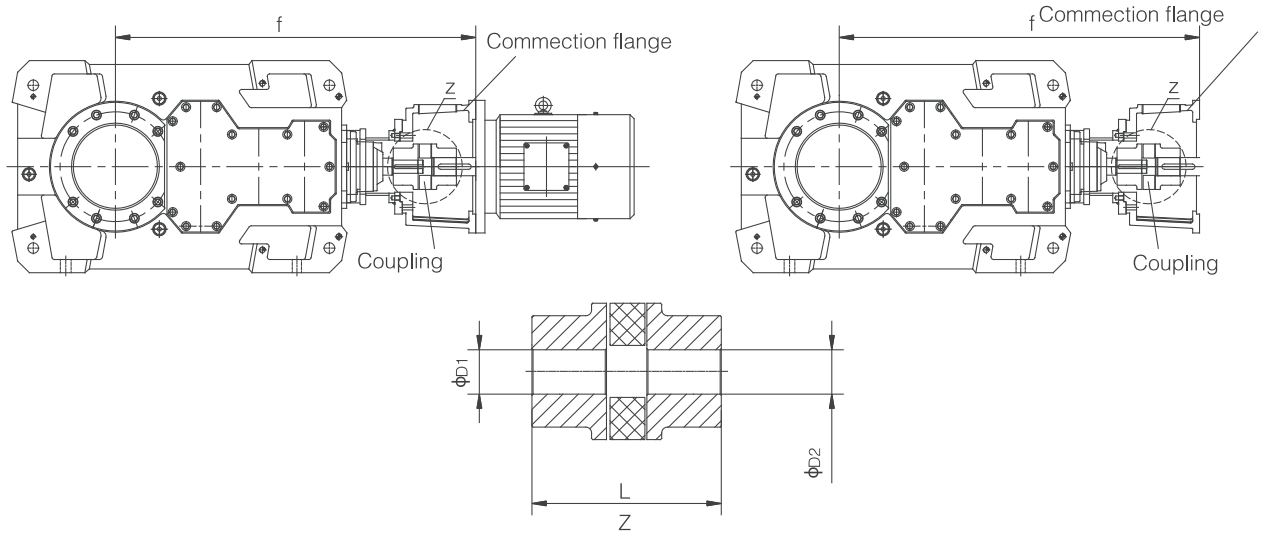

B4			iN≤280(Size：13、14、15、16、18) iN≤250(Size：17)					iN≥315(Size：13、14、15、16、18) iN≥280(Size：17)				
Size	M Motor	AF Flange	Coupling				f	Coupling				f
			Type	D1	D2	L		Type	D1	D2	L	
13	180							GA55	50	48	160	1429
	200		GA65	60	55	185	1437	GA65	50	55	185	1437
	225		GA65	60	60	185	1467	GA65	50	60	185	1467
	250		GA75	60	65	210	1470	GA75	50	65	210	1470
	280		GA75	60	75	210	1470	GA75	50	75	210	1470
	315		GA90	60	80	245	1524					
14	180							GA55	50	48	160	1499
	200		GA65	60	55	185	1507	GA65	50	55	185	1507
	225		GA65	60	60	185	1537	GA65	50	60	185	1537
	250		GA75	60	65	210	1540	GA75	50	65	210	1540
	280		GA75	60	75	210	1540	GA75	50	75	210	1540
	315		GA90	60	80	245	1594					
15	200							GA65	60	55	185	1679
	225		GA75	75	60	210	1709	GA65	60	60	185	1709
	250		GA75	75	65	210	1712	GA75	60	65	210	1712
	280		GA75	75	75	210	1712	GA75	60	75	210	1712
	315		GA90	75	80	245	1766	GA90	60	80	245	1766
	355		GC110	75	95	185	1766					
16	200							GA65	60	55	185	1725
	225		GA75	75	60	210	1755	GA65	60	60	185	1755
	250		GA75	75	65	210	1758	GA75	60	65	210	1758
	280		GA75	75	75	210	1758	GA75	60	75	210	1758
	315		GA90	75	80	245	1812	GA90	60	80	245	1812
	355		GC110	75	95	185	1812					
17	225							GA65	60	60	185	1757
	250							GA75	60	65	210	1760
	280		GA75	75	75	210	1760	GA75	60	75	210	1760
	315		GA90	75	80	245	1814	GA90	60	80	245	1814
	355		GC110	75	95	185	1814					
18	225							GA65	60	60	185	1817
	250							GA75	60	65	210	1820
	280		GA75	75	75	210	1820	GA75	60	75	210	1820
	315		GA90	75	80	245	1874	GA90	60	80	245	1874
	355		GC110	75	95	185	1874					

16 Accessory

16.1 Cooling fan (Accessory code:UF21)

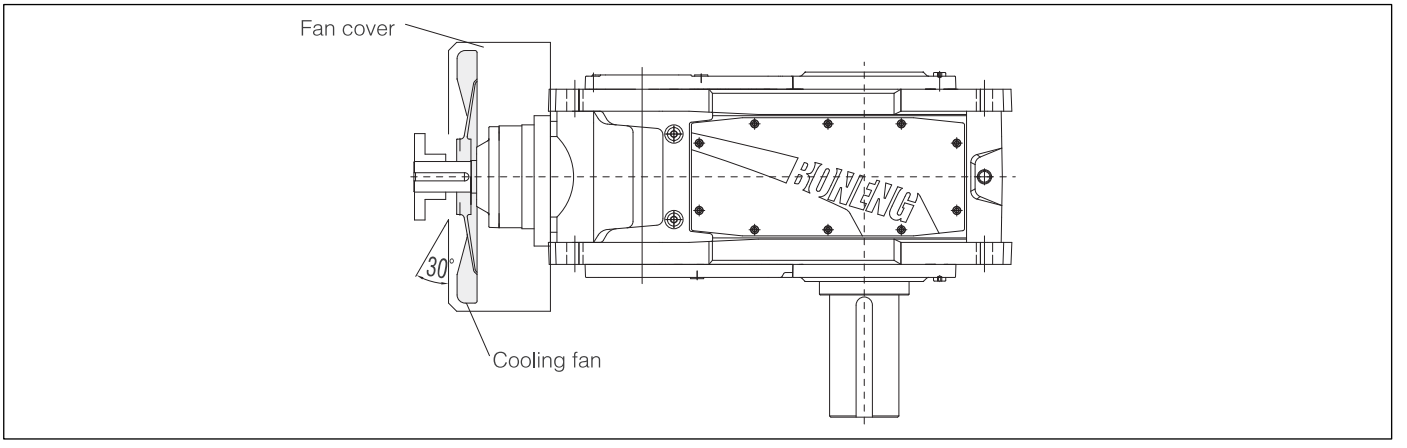

16.2 Water oil cooler (Accessory code:UC22)

1) Horizontal mounting:

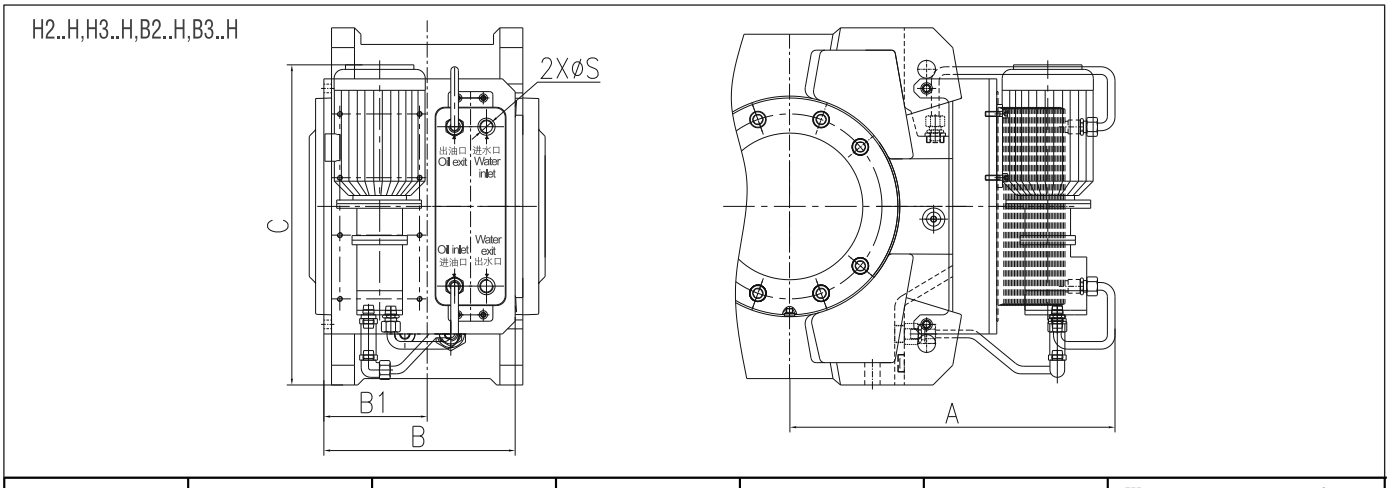

Size	A	B	B1	C	S	Water quantity (L/min)
13	772	405	288.5	714	G1/2	10
14	842	405	288.5	714	G1/2	10
15	883	405	326	774	G1/2	10
16	925	405	326	774	G1/2	10
17	929	405	356	849	G1/2	14
18	989	405	356	849	G1/2	14

2) Vertical mounting:

H2..V,H3..V,B2..V,B3..V

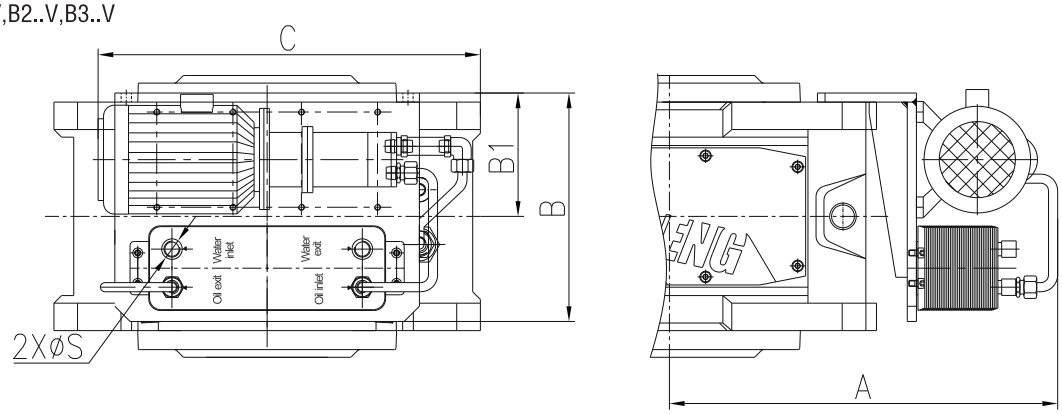

Size	A	B	B1	C	S	Water quantity (L/min)
13	772	405	288.5	714	G1/2	10
14	842	405	288.5	714	G1/2	10
15	883	405	326	774	G1/2	10
16	925	405	326	774	G1/2	10
17	929	405	356	849	G1/2	14
18	989	405	356	849	G1/2	14

16.3 Cooling coil(Code:UC21)

*For exquisite vibration applications the water-oil cooler is recommended（Code：UC22)

1) Horizontal mounting:

H2..H,H3..H,B2..H,B3..H

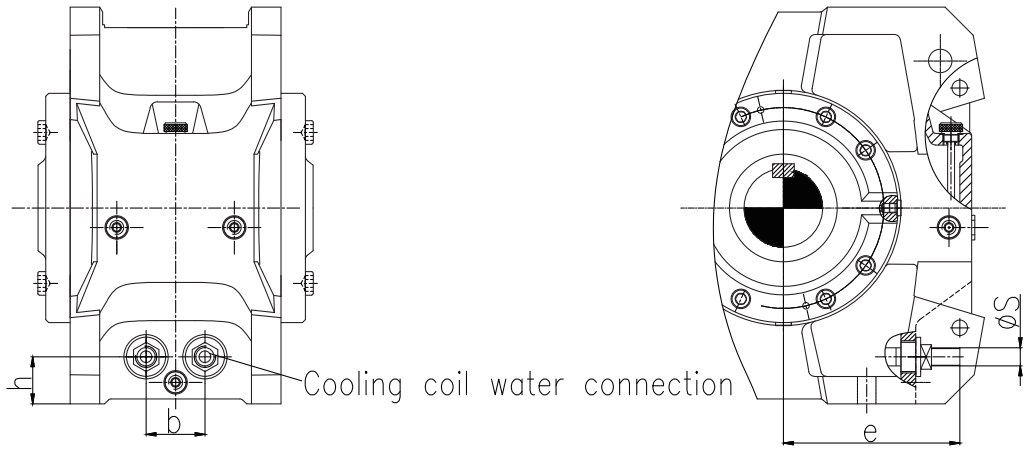

Size	H2..H/HB..H					H3..H					H2..H				
	b	e	h	s	Water quantity (L/min)	b	e	h	s	Water quantity (L/min)	b	e	h	s	Water quantity (L/min)
13	150	386	120	G1/2	10	150	386	120	G1/2	10	150	386	120	G1/2	10
14	150	456	120	G1/2	10	150	446	120	G1/2	10	150	446	120	G1/2	10
15	200	439	120	G1/2	10	200	424	120	G1/2	10	200	424	120	G1/2	10
16	200	494	120	G1/2	10	200	494	120	G1/2	10	200	494	120	G1/2	10
17	/	/	/	/	/	/	/	/	/	/	/	/	/	/	/
18	/	/	/	/	/	/	/	/	/	/	/	/	/	/	/

2) Vertical mounting:

H2..V,H3..V,B2..V,B3..V

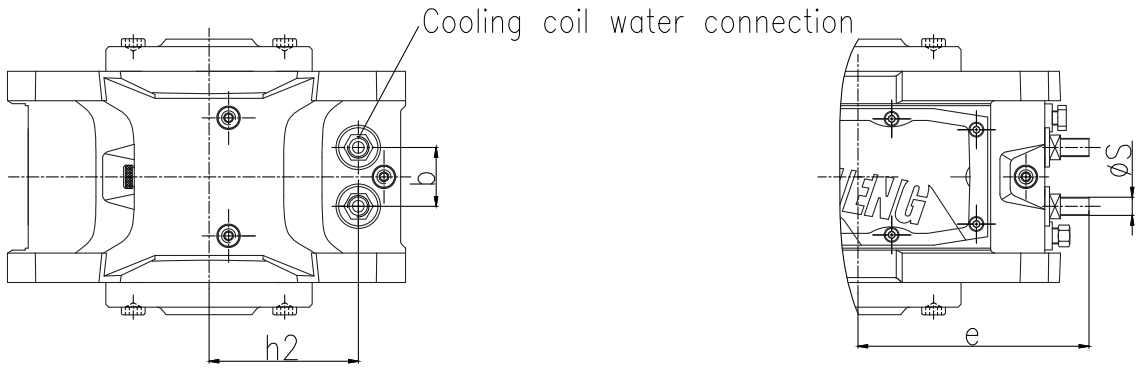

Size	H2..V/B3..V					H3..V					H2..V				
	b	e	h	s	Water quantity (L/min)	b	e	h	s	Water quantity (L/min)	b	e	h	s	Water quantity (L/min)
13	150	386	120	G1/2	10	150	386	120	G1/2	10	150	386	120	G1/2	10
14	150	456	120	G1/2	10	150	446	120	G1/2	10	150	446	120	G1/2	10
15	200	439	120	G1/2	10	200	424	120	G1/2	10	200	424	120	G1/2	10
16	200	494	120	G1/2	10	200	494	120	G1/2	10	200	494	120	G1/2	10
17	/	/	/	/	/	/	/	/	/	/	/	/	/	/	/
18	/	/	/	/	/	/	/	/	/	/	/	/	/	/	/

Type	Cooling coil is appropriate for		
	Size	Flange pump forced lubrication	Motor oil pump forced lubrication
		Applicable shaft assemblies	Applicable shaft assemblies
H2..V	13-18	B+D+F+H	B+D+F+H
H3..V	13-18	B+D+F+H	B+D+F+H
B2..V	13-18	C+D+F	C+D+F
B3..V	13-18	C+D+F	C+D+F

16.4 Motor oil pump forced lubrication(Code:US32)

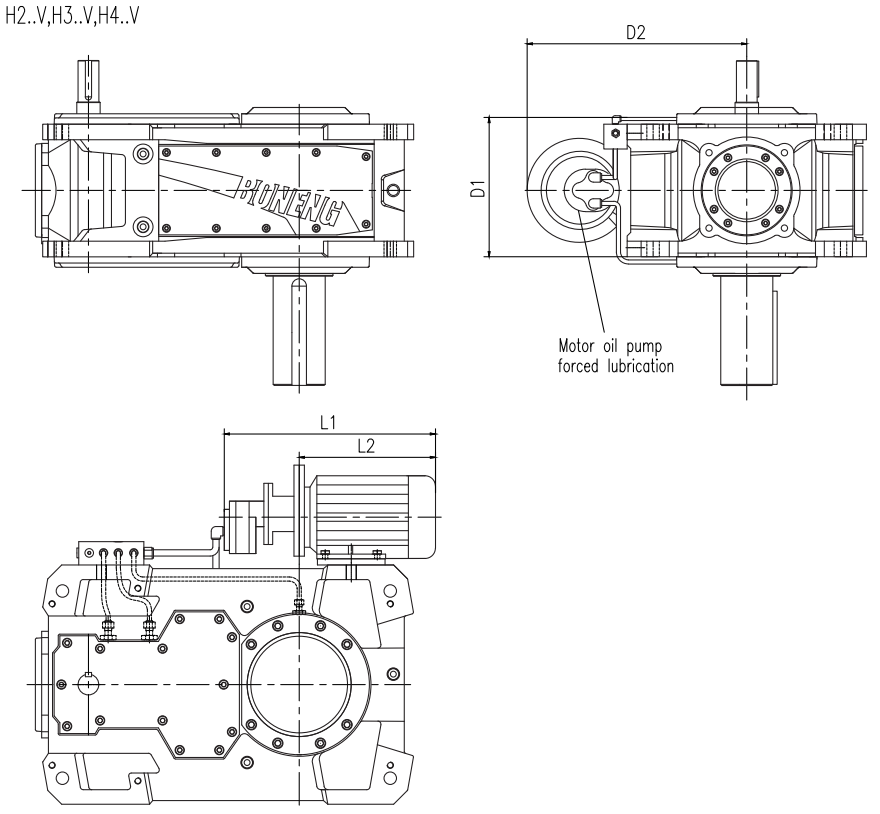

Mounting dimension						
Type	Size	Shaft assemblies	L2	L1	D2	D1
H2..V	13/14	A+B+C+D+E+F+G+H+I	484/554	456	624	566
	15/16	A+B+C+D+E+F+G+H+I	544/589	456	702	640
	17/18	A+B+C+D+E+F+G+H+I	569-629	460	752	701
H3..V	13/14	A+B+C+D+E+F+G+H+I	484/554	456	624	566
	15/16	A+B+C+D+E+F+G+H+I	544/589	456	702	640
	17/18	A+B+C+D+E+F+G+H+I	569-629	460	752	701
H4..V	13/14	A+B+C+D+E+F+G+H+I	484/554	456	624	566
	15/16	A+B+C+D+E+F+G+H+I	544/589	456	702	640
	17/18	A+B+C+D+E+F+G+H+I	569-629	460	752	701

B2..V,B3..V,B4..V

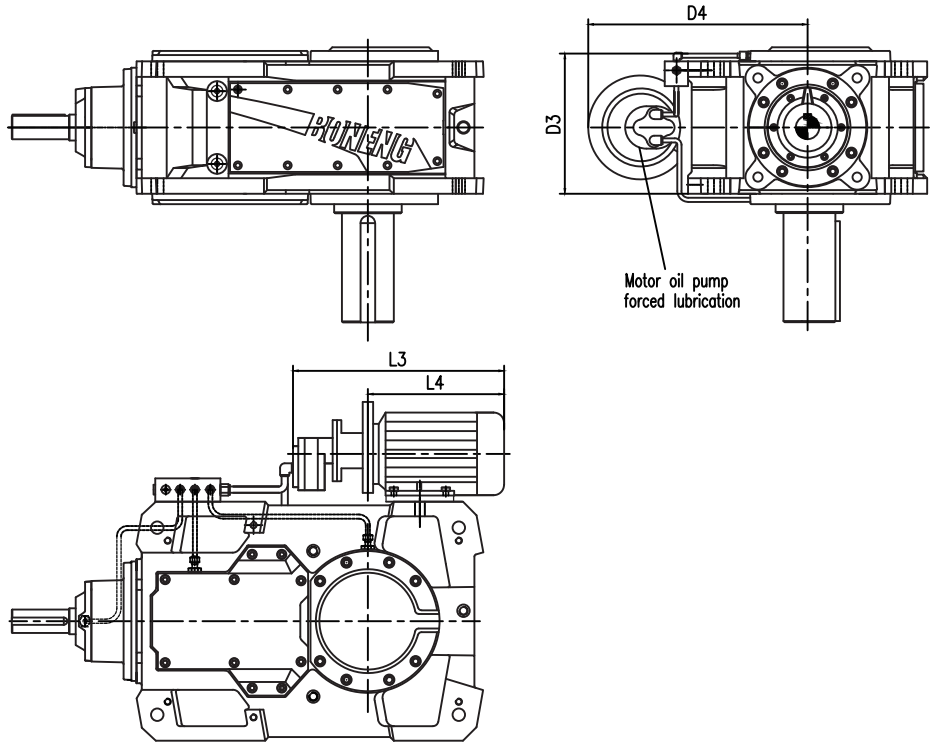

Mounting dimension						
Type	Size	Shaft assemblies	L4	L3	D4	D3
H2..V	13/14	A+B+C+D+E+F+G+H+I	484/554	456	624	566
	15/16	A+B+C+D+E+F+G+H+I	544/589	456	702	640
	17/18	A+B+C+D+E+F+G+H+I	569-629	460	752	701
H3..V	13/14	A+B+C+D+E+F+G+H+I	484/554	456	624	566
	15/16	A+B+C+D+E+F+G+H+I	544/589	456	702	640
	17/18	A+B+C+D+E+F+G+H+I	569-629	460	752	701
H4..V	13/14	A+B+C+D+E+F+G+H+I	484/554	456	624	566
	15/16	A+B+C+D+E+F+G+H+I	544/589	456	702	640
	17/18	A+B+C+D+E+F+G+H+I	569-629	460	752	701

16.5 Backstop (Accessory code UB11)

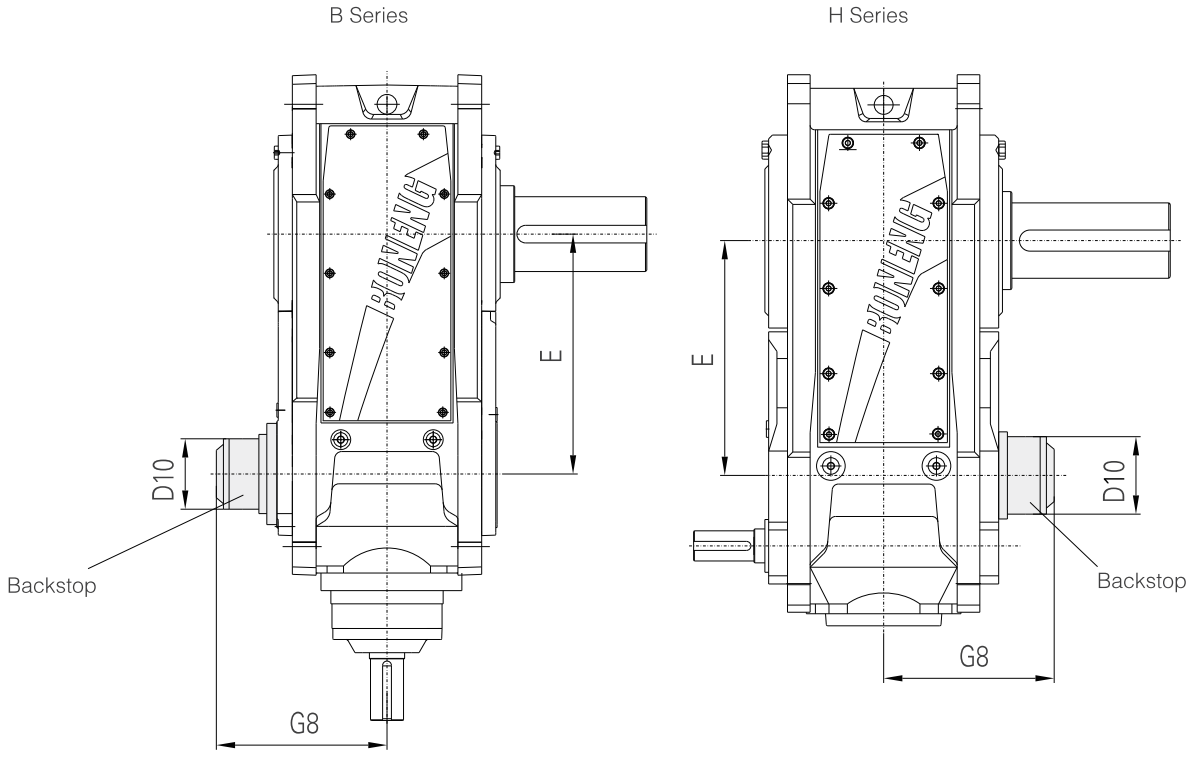

Size	13			14			15			16			17			18		
	D10	G8	E	D10	G8	E	D10	G8	E	D10	G8	E	D10	G8	E	D10	G8	E
B3	290	426	635	290	426	705	310	472	762	310	472	808	310	498	860	310	498	920
B4/H4	175	373	820	175	373	890	230	465	987	230	465	1033	230	495	1035	230	495	1095
H3	290	426	610	290	426	680	310	472	731	310	472	777	310	502	779	310	502	839

⚠ Note: The rotation direction is the direction of output shaftd while face the output shaft.

16.6 Lubrication oil

16.6.1 Oil quantity

Oil Quantity Table(L)												
Size	H2..H	H3..H	H4..H	B2..H	B3..H	B4..H	H2..V	H3..V	H4..V	B2..V	B3..V	B4..V
	①	①	①	①	①	①	③	③	③	③	③	③
13	135	160	130	140	130	145	80	115	95	100	95	130
14	140	165	140	155	140	150	90	126	105	110	110	150
15	210	235	230	220	210	230	140	180	150	145	165	200
16	215	245	235	230	220	235	150	190	160	160	190	235
17	290	305	290	320	290	295	175	190	190	210	210	215
18	300	315	305	335	300	305	185	200	200	220	240	250

⚠ Note:1.① Oil tank splash lubrication ②Dip-in lubrication ③ Forced lubrication.
2.The above data are average values.

16.6.2 Lubrication oil (heavy-loading industrial gear oil) viscosity number selection[VG320(Accessory code:UV32)]

Ambient temperature℃	-20℃~+40℃
Viscosity number	VG320

⚠ Note:1.Viscosity in the above table is ISO-VG Viscosity under 40 °C
2.When ambient temperature is lower than-10°C,synthetic oil must be used.
3.To ensure product lifespan, we suggest synthetic oil.
4.IF ambient temperature exceeds the above range, please consult.

16.7 Torque arm (Code:UT61)

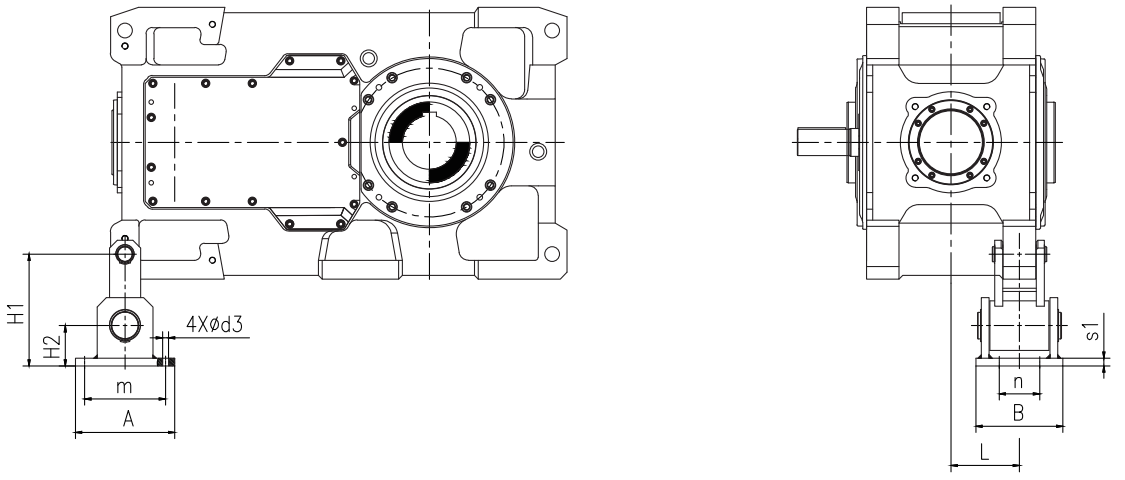

Size	A	B	Φd3	H1	H2	m	n	s1	B2	B3/B4/H2/H3/H4	Weight (kg)
									L	L	
13	320	280	19	360	130	260	130	25	272.5	220	73.1
14	320	280	19	360	130	260	130	25	272.5	220	73.1
15	400	300	24	455	160	320	240	30	317.5	247.5	117.7
16	400	300	24	455	160	320	240	30	317.5	247.5	117.7
17	400	300	24	455	160	320	240	30	370	272.5	117.7
18	400	300	24	455	160	320	240	30	370	272.5	117.7

16.8 Outpt mounting flange (Code:UF32)

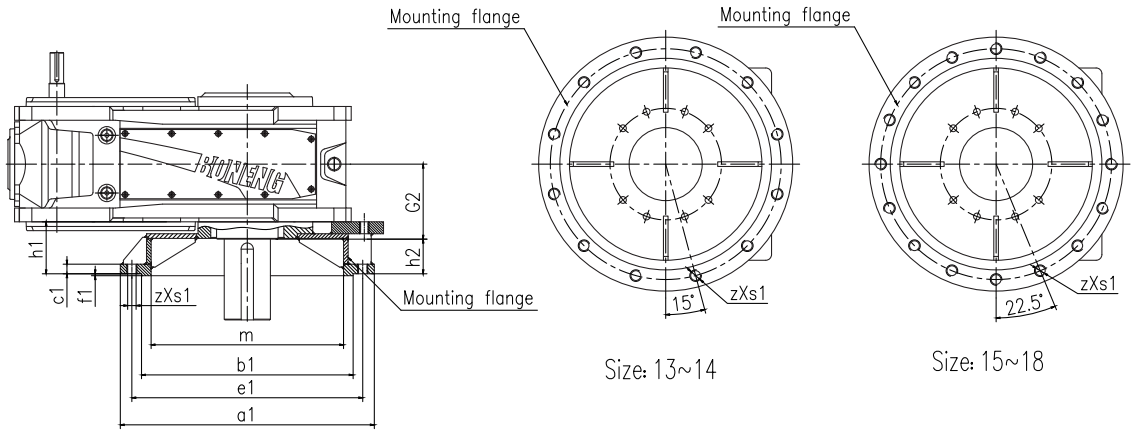

Size	a1	b1	c1	e1	f1	G2	h2	m	zxs1	h1		Weight (kg)
										B2	H2, H3, H4, B3, B4	
13	840	650f7	50	760	5	335	37.5	450	12xM30	77.5	100	245
14	840	650f7	50	760	5	335	37.5	480	12xM30	77.5	100	255
15	960	750f7	50	880	5	380	30	530	16xM30	65	100	315
16	960	750f7	50	880	5	380	30	540	16xM30	65	100	325
17	1100	850f7	57	1000	8	415	62	540	16xM36	107	137	595
18	1100	850f7	57	1000	8	415	62	540	16xM36	107	137	605

16.9 Accessories code table:

Code	Accessories	Example
UB11	Backstop	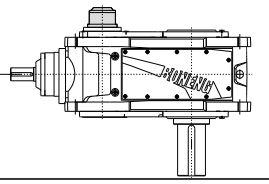
U C22	Water-Oil cooler	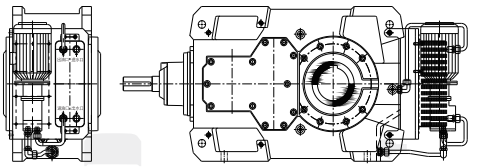
UF21	Cooling fan	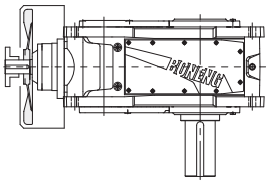
US31	Shaft end oil pump forced lubrication	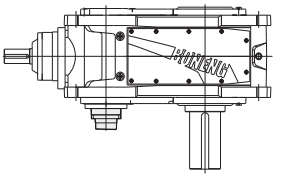
US32	Motor oil pump forced lubrication	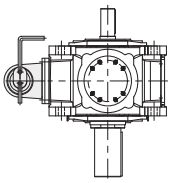
UV32	Lubrication oil VG320	
UV46	Lubrication oil VG460	

Code	Accessories	Example
Please consult	Torque arm UT61	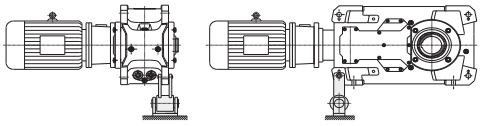
	Gear box swing base	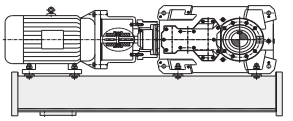
	Swing base with torque arm	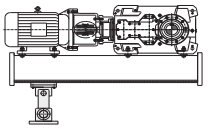
	Mounting flange UF32	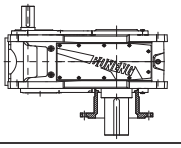
	External wind air-oil cooler UC23	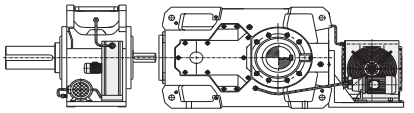
	Pipeline(Customer build oil station)	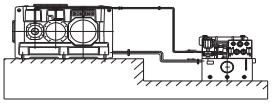
	Oil station	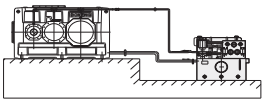
	Upright mounting	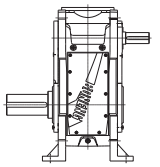
	Electric heater	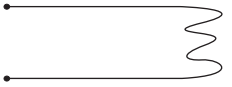
	Shaft sealing of other categories	

www.boneng.com

Along with the technology advancedet.,the product of the manual of Boneng will be changed,please forgive.

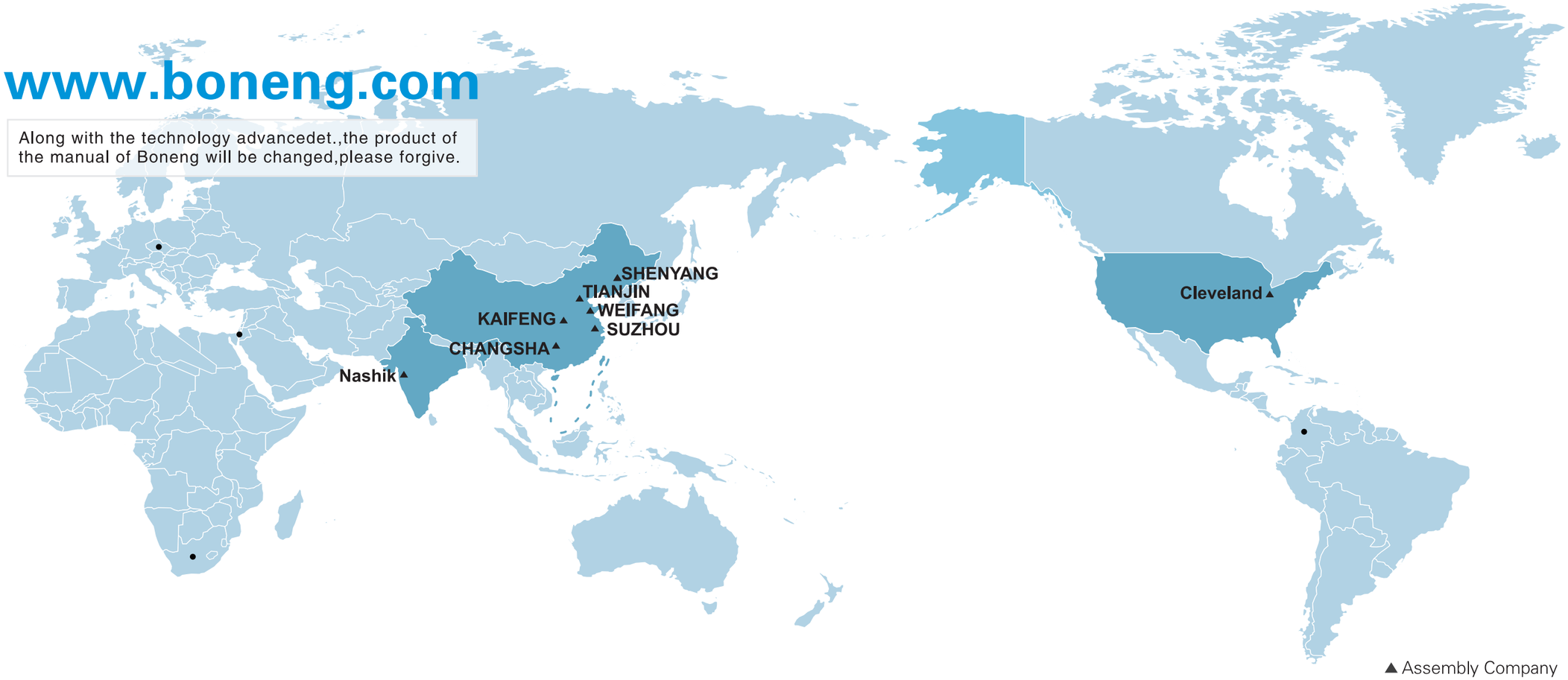

BONENG TRANSMISSION(INDIA)PVT.LTD

Plot No. E-10/3, MIDC sinnar (Malegaon)
Industrial Area, Nashik, 422123,
Maharashtra, India.
TEL:+91-11- 4507 6293（DELHI）
TEL:+91-22-2781 3385（MUMBAI）

BONENG TRANSMISSION(SUZHOU)CO.,LTD.

No. 100, Ruyuan Road, Xiangcheng District, 215131
Suzhou, Jiangsu Province, China
TEL: 0512-66189662

BONENG TRANSMISSION(SHENYNG)CO.,LTD.

No. A73-6, Area A, Pacific Industrial City, Shenbei 110013
New District, Shenyang, Liaoning Province, China
TEL: 024-31271571

BONENG TRANSMISSION(TIANJIN)CO.,LTD.

7th Workshop, Hongpeng Industrial Park, No. 6 300021
Shuanghai Road, Beichen District, Tianjin City,China
TEL: 022-26929556

BONENG TRANSMISSION(WEIFANG)CO.,LTD.

1st Workshop, Economic Development Zone, Anqiu, 261000
Weifang City, Shandong Province, China
TEL: 0536-2141166

BONENG TRANSMISSION(KAIFENG)CO.,LTD.

5th Workshop, Haishen Machinery, No.11, Fourth 475000
Street, Songcheng Road,New District, Kaifeng City,
Henan Province, China
TEL: 0371-23335238

BONENG TRANSMISSION(CHANGSHA)CO.,LTD.

No. 1288 Puri Avenue, Wangcheng Economic Development 410205
Zone, Changsha City, Hunan Province，China
TEL: 0731-88386958

BONENG TRANSMISSION(USA)LLC.

1250 E 222nd Euclid, OH 44117,United Staes
TEL: 1-216-618-3099
TEL: 1-216-618-0138